PLANS

OF THE

CWSRF/ARPA SEWER SYSTEM IMPROVEMENTS

FOR THE

TOWN OF LEXINGTON

LAUDERDALE COUNTY, ALABAMA

KG JOB NUMBER 220032

CWSRF PROJECT NUMBER CS010886-02

MAY 2024

SHEET INDEX

SHEET NO.	DESCRIPTION
1	TITLE SHEET
2	GENERAL NOTES
3	EXISTING SEWER SYSTEM
4	EXISTING TREATMENT FACILITY
5	DEMOLITION PLAN
6	PROPOSED IMPROVEMENTS PLAN
7	AERATOR DETAILS
8-12	MISCELLANEOUS DETAILS
13	EROSION CONTROL DETAILS

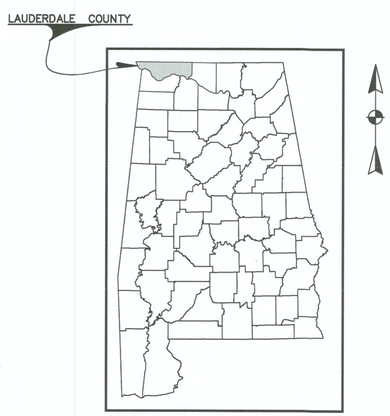

LOCATION MAP

N.T.S.

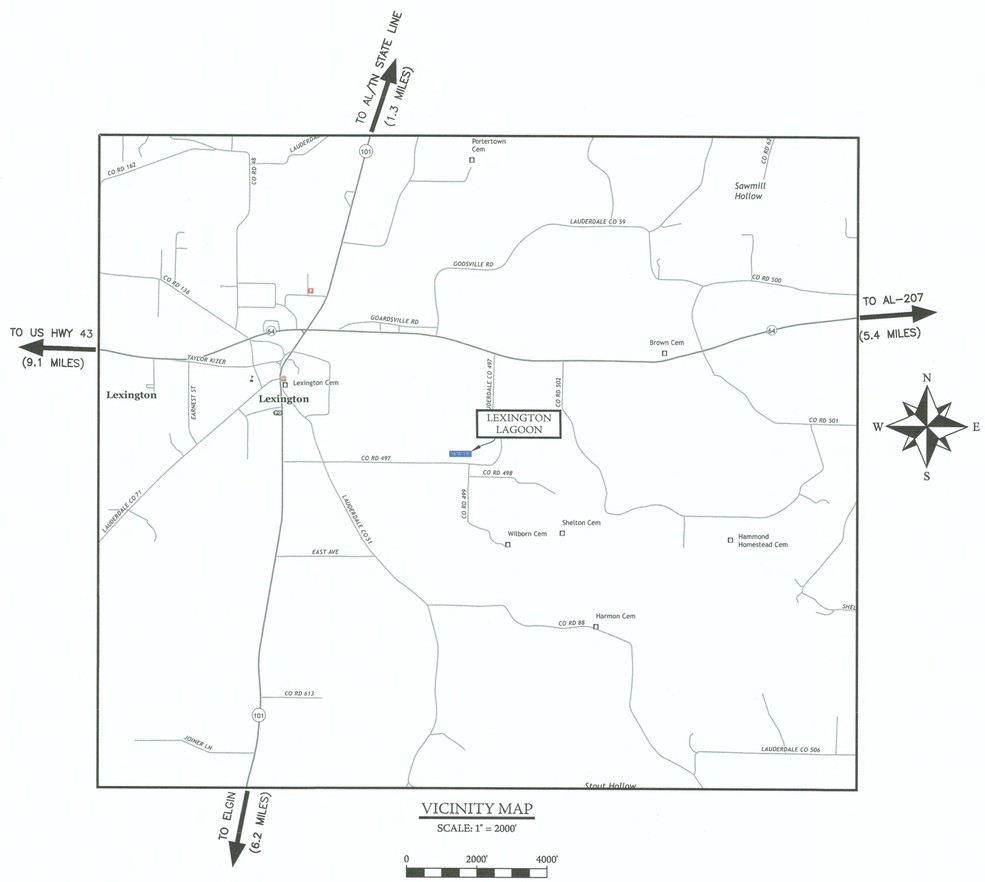

VICINITY MAP

SCALE: 1" = 2000'

0 2000' 4000'

5/7/24

PREPARED BY:

THE KELLEY GROUP

• A CIVIL ENGINEERING COMPANY •

850 Corporate Pkwy, Suite 104, Birmingham, AL 35242

301 N Dickson Street, Tuscumbia, AL 35674

REVISIONS

#	DESCRIPTION	DATE	BY
1			
2			
3			
4			
5			
6			

TITLE SHEET

CWSRF/ARPA SEWER SYSTEM IMPROVEMENTS
TOWN OF LEXINGTON
LAUDERDALE COUNTY
ALABAMA

THE KELLEY GROUP

• A CIVIL ENGINEERING COMPANY •

850 Corporate Pwky, Suite 104
Birmingham, Alabama 35242

301 N Dickson St,
Tuscumbia, AL 35674

ATTENTION:
THIS BAR = 1 INCH ON ORIGINAL DRAWING.
ADJUST SCALE IF THIS BAR = 1 INCH.

PROJECT NO: 220032

DRAWN BY: EAS

CHECKED BY: BWT

SCALE: AS NOTED

DATE: 05/2024

SHEET NO.

1

5/1/2024 1:19:23 PM

R:\2022\220032- LEXINGTON CWSRF 2022\7.0 CAD\PRODUCTION PLAN\220032 TITLE SHEET.DWG

5/1/2024 1:19:38 PM

GENERAL NOTES:

1. ALL MATERIALS, WORKMANSHIP AND CONSTRUCTION METHODS TO BE IN ACCORDANCE WITH THE FOLLOWING:

A) KELLEY GROUP SPECIFICATIONS

B) STATE OF ALABAMA DEPARTMENT OF TRANSPORTATION STANDARD SPECIFICATIONS OF HIGHWAY CONSTRUCTION, LATEST EDITION.

2. ALL CONTRACTORS AND THEIR SUBCONTRACTORS ARE RESPONSIBLE FOR REVIEWING EXISTING SITE CONDITIONS AND HAVING ALL QUESTIONS ANSWERED PRIOR TO SUBMITTING BIDS AND BEGINNING CONSTRUCTION. A PRE-BID MEETING WILL BE HELD AND THE LOCATION/TIME IS LISTED IN THE SPECIFICATIONS.

3. CONTRACTOR WILL BE RESPONSIBLE FOR ALL CONSTRUCTION STAKING DURING THE PERFORMANCE OF THE CONTRACT. AT THE TIME OF BID, CONTRACTOR TO SUBMIT THE NAME, ADDRESS, TELEPHONE NUMBER AND QUALIFICATIONS OF THE PERSONNEL WHO WILL PERFORM THIS SERVICE.

4. ALL EXISTING UTILITIES SHOWN ON THESE DRAWINGS ARE APPROXIMATE AND OTHER UTILITIES MAY EXIST. CONTRACTOR MUST HAVE EXISTING UTILITIES LOCATED BY UNDERGROUND LINE LOCATORS AS WELL AS FIELD VERIFIED BY ONSITE PERSONNEL PRIOR TO ORDERING MATERIALS OR BEGINNING CONSTRUCTION. ANY DISCREPANCIES SHALL BE REPORTED TO THE KELLEY GROUP, LLC.

5. THE CONTRACTOR SHALL TAKE ALL NECESSARY MEASURES TO PROTECT ADJACENT PROPERTIES AND IS RESPONSIBLE FOR ANY DAMAGE TO EXISTING IMPROVEMENTS ON OR OFF SITE DUE TO THE CONSTRUCTION OF THIS PROJECT. ANY DAMAGE WILL BE REPAIRED AT THE CONTRACTOR'S EXPENSE.

6. CONTRACTOR SHALL VERIFY SITE BOUNDARY AND EXISTING TOPOGRAPHY. NOTIFY THE KELLEY GROUP, LLC. OF ANY DISCREPANCIES PRIOR TO SUBMITTING PRICES OR ORDERING MATERIALS.

7. IT IS THE RESPONSIBILITY OF THE CONTRACTOR TO OBTAIN ALL NECESSARY PERMITS REQUIRED TO CONSTRUCT THIS PROJECT AND PAY ALL PERMIT FEES. ALL PERMITS MUST BE IN-HAND PRIOR TO CONSTRUCTION.

8. IT IS THE CONTRACTOR'S RESPONSIBILITY TO PROTECT ALL BENCHMARKS AND PROPERTY CORNERS. ANY REPLACEMENT WILL BE AT THE CONTRACTOR'S EXPENSE.

9. CONTRACTOR IS RESPONSIBLE FOR OFFSETTING/MOVING THE SUPPLIED CONTROL DATA FOR PERFORMANCE OF THE NECESSARY WORK. ANY DEVIATION FROM THE SUPPLIED POINTS AND THE PLANS SHOULD IMMEDIATELY BE BROUGHT TO THE ATTENTION OF THE ENGINEER PRIOR TO THE CONTINUATION OF THE WORK.

10. THE SITE WILL BE AVAILABLE TO ANY CONTRACTOR BEFORE THE OFFICIAL BID OPENING.

EROSION CONTROL NOTES:

1. SITE EROSION CONTROL MEASURES SHALL BE IN ACCORDANCE WITH ALL FEDERAL, STATE, AND LOCAL LAWS, CODES, AND REGULATIONS.

2. ALL EROSION CONTROL DEVICES SHALL BE PROPERLY MAINTAINED DURING THE CONSTRUCTION PROCESS AND UNTIL ALL DISTURBED AREAS HAVE BEEN PERMANENTLY STABILIZED. ALL EROSION CONTROL INSTALLATION AND MAINTENANCE SHALL BE SOLELY THE RESPONSIBILITY OF THE CONTRACTOR AND SHALL BE SUBSIDIARY TO THE EROSION AND SEDIMENT CONTROL PAY ITEM.

3. EROSION CONTROL DEVICES SHOWN ON THESE PLANS ARE A MINIMUM. ADDITIONAL DEVICES SHALL BE INSTALLED AS REQUIRED TO PREVENT SILTATION, EROSION, AND OTHER DEGRADATION OR POLLUTION TO SITE OR ADJACENT PROPERTIES, STREAMS, DITCHES, AND PUBLIC ROADWAYS.

4. EROSION CONTROL DEVICES SHALL INCLUDE THE FOLLOWING DEVICES: SILT FENCING, BRUSH BERMS, SEDIMENT BASINS, DETENTION PONDS, STRAW WATTLES, CHECK DAMS, FILTER BERMS, JUTE MATTING, VEGETATIVE FILTER STRIPS, TURN REINFORCEMENT MAT, DIVERSION BERMS, ETC.

5. THE CONTRACTOR SHALL BE RESPONSIBLE FOR MAINTAINING ALL EROSION CONTROL DEVICES IN GOOD OPERATING CONDITION DURING ALL LAND DISTURBING ACTIVITIES. THIS RESPONSIBILITY SHALL INCLUDE THE CLEANUP AND/OR REPAIRS TO THE DEVICES AT NO ADDITIONAL COST TO THE OWNER.

6. EROSION CONTROL DEVICES SHALL BE MONITORED AND MAINTAINED UNTIL THE SITE HAS BEEN PERMANENTLY STABILIZED AND AFTER EACH RAINFALL GREATER THAN 0.5 INCHES IN A 24 HOUR PERIOD, ANY WIND GUSTS GREATER THAN 25 MPH, AND ANY SUSTAINED WINGS GREATER THAN 20 MPH IN A 24 HOUR PERIOD.

7. AFTER ALL LAND DISTURBANCE ACTIVITIES HAVE CEASED AND AFTER ALL DISTURBED AREAS HAVE BEEN PERMANENTLY STABILIZED, THE EROSION CONTROL DEVICES SHALL BE REMOVED BY THE CONTRACTOR AND THE AREA CLEANED AND DRESSED.

8. A GRAVELED ACCESS DRIVE OF SUFFICIENT SIZE SHALL BE AT EACH SITE ENTRANCE/EXIT TO PREVENT TRACKING OF DIRT AND SEDIMENT ONTO PUBLIC OR PRIVATE ROADWAYS. IF SEDIMENT REACHES THE ROADWAY, THEN IT MUST BE CLEANED AT THE END OF EACH WORKDAY. PAYMENT IS CONSIDERED SUBSIDIARY TO EROSION CONTROL ITEM.

9. ALL LAND DISTURBANCE ACTIVITIES SHALL BE CONDUCTED IN A LOGICAL SEQUENCE TO MINIMIZE THE EXPOSURE OF BARE AREAS AT ANY ONE TIME.

10. ALL DISTURBED AREAS LEFT INACTIVE FOR MORE THAN 14 DAYS SHALL BE SEEDED AND MULCHED IN ACCORDANCE WITH ALDOT SPECIFICATION SECTION 652 AND 656.

11. PRIOR TO SITE CLEARING, ALL PERIMETER SILT FENCING, BRUSH BERMS, ETC. AND GRAVELED ACCESS DRIVES SHALL BE INSTALLED.

12. ALL EXISTING STREAMS, DITCHES, ETC. SHALL BE PROTECTED FROM SEDIMENTS AND SILTS BY SILT FENCING, WATTLES, BRUSH BERMS, ETC.

13. ALL EROSION CONTROL MEASURES SHALL MEET THE REQUIREMENTS OF SECTIONS 665 OF THE ALDOT SPECIFICATIONS. PLANS SHOW PROPOSED EROSION CONTROL MEASURES. THE ENGINEER RESERVES THE RIGHT TO ALTER AND CHANGE THE EROSION CONTROL PLANS DUE TO WEATHER AND/OR UNFORESEEN NEED FOR EROSION CONTROL. CONTRACTOR IS EXPECTED TO BE PROACTIVE IN INSURING PROPER EROSION CONTROL. CONTRACTOR SHALL BE REQUIRED TO PROVIDE AN APPROVED RAIN GAUGE TO BE LOCATED ON SITE AND RAIN READINGS RECORDED.

GRADING NOTES:

1. ALL DEMOLITION AND CONSTRUCTION DEBRIS SHALL BE TRANSPORTED AND DISPOSED OF AT LEAST WEEKLY IN AN APPROVED MANNER, AND COMPLETED IN ACCORDANCE WITH SECTION 210 OF THE ALDOT SPECIFICATIONS.

2. GRADES SHOWN ON PLANS REPRESENT FINISHED GRADES AND ELEVATIONS.

3. CLEARING LIMITS SHALL BE 5' OUTSIDE OF ALL PROPOSED GRADED AREAS OR NOT BEYOND THE PROPERTY LINES WHICHEVER IS LESS. PAYMENT IS CONSIDERED SUBSIDIARY TO THE INSTALLATION OF THE WATER LINE.

4. NO GRADING OFF-SITE OR IN ROAD RIGHT-OF-WAY WITHOUT PROPER APPROVALS AND PRIOR NOTIFICATION.

5. COORDINATE THE SEQUENCING OF ALL GRADING OPERATIONS WITH THE EROSION CONTROL PLAN.

6. PROPOSED GRADES INDICATED ON THIS PLAN ARE TO FINISH GRADE. THE CONTRACTOR SHALL MAKE SUBGRADE ADJUSTMENTS FOR TOPSOIL, PAVING, BUILDING PAD, ETC.

7. ALL NEW GRADING MUST SMOOTHLY TRANSITION INTO EXISTING GRADES AT THE CULMINATION OF THE NEW GRADES SLOPE.

UTILITY NOTES:

1. IT SHALL BE THE RESPONSIBILITY OF THE CONTRACTOR TO CONTACT THE VARIOUS UTILITY OWNERS AND DETERMINE THE EXACT LOCATION OF ALL EXISTING UTILITIES WHETHER SHOWN ON THE PLANS OR NOT.

2. CONTRACTOR TO MAKE UTILITY LINE LOCATE REQUEST IN INCREMENTS NOT TO EXCEED 2,000 LINEAR FEET PER WORKING DAY.

3. UTILITY TRENCHES SHALL BE BACKFILLED WITH COMPACTED FILL PLACED IN 6 INCH LOOSE LIFTS. FILL SHALL BE COMPACTED TO 98% STANDARD PROCTOR AND OPTIMUM MOISTURE CONTENT WITHIN ±2.0%.

4. WHEN INSTALLING UTILITIES IN EXISTING PAVED AREAS OR IN AREAS WHERE SOILS ARE CONSIDERED UNSUITABLE FOR BEDDING OR BACKFILLING, UTILITY TRENCHES SHALL BE BACKFILLED FULL DEPTH WITH CRUSHED AGGREGATE. PAYMENT IS CONSIDERED SUBSIDIARY TO THE WATER LINE.

5. CONTRACTOR TO NOTIFY FIRE DEPARTMENT, POLICE, AND RESCUE SERVICES OF ANY WORK WORK REQUIRING OPEN CUT OF ROADWAYS.

6. SERVICE CONNECTIONS SHALL BE COORDINATED WITH THE OWNER FOR PLACEMENT OF METER BOXES WHEN PLACEMENT OF NEW OR RELOCATION OF EXISTING METER BOXES OCCURS.

7. ALL WATER MAINS, FIRE HYDRANTS, AND WATER SERVICE CONNECTIONS SHALL HAVE A MINIMUM COVER OF 3'-6" UNLESS INDICATED ON PLANS.

8. MAXIMUM PIPE DEFLECTION SHALL BE ½ OF THE MANUFACTURERS MAXIMUM ALLOWABLE DEFLECTION OR 2.5', WHICHEVER IS LESS.

9. NEW PIPE THAT IS LEFT UNATTENDED DURING CONSTRUCTION SHALL HAVE TEMPORARY PLUGS INSTALLED AT ALL OPENINGS.

10. VALVES SHALL BE INSTALLED AT A DISTANCE OF 5'-0" FROM TEES AND CROSSES.

11. ALL WATER VALVE LIDS SHALL BE CAST DUCTILE IRON AND LABELED WITH THE WORDS "WATER". PAYMENT IS CONSIDERED SUBSIDIARY TO THE VALVE.

12. ALL BENDS, TEES, PLUGS, DEAD-ENDS, WET TAPS, FIRE HYDRANTS, AND BLOW OFF ASSEMBLIES SHALL BE CONSTRUCTED WITH CONCRETE KICKERS. PAYMENT SHALL BE MADE PER CUBIC YARD OF CONCRETE.

13. THE CONTRACTOR IS RESPONSIBLE FOR COLLECTING AND SENDING THE SAMPLING BACTERIAL WATER SAMPLE TO THE APPROPRIATE LAB FOR TESTING, COORDINATE WITH THE OWNER. PAYMENT IS CONSIDERED SUBSIDIARY TO THE WATER LINE.

14. ALL NEW WATER LINES ARE TO BE ISOLATED, TESTED, AND APPROVED BY THE ENGINEER PRIOR TO OPENING THE NEW LINE TO THE EXISTING WATER SYSTEM. PAYMENT IS CONSIDERED SUBSIDIARY TO WATER LINE.

15. WATER LINE TRENCHES SHALL BE SLOPED OR BRACED AND SHEETED AS NECESSARY FOR THE SAFETY OF THE WORKERS AND THE PROTECTION OF OTHER UTILITIES, IN COMPLIANCE WITH ALL STATE AND FEDERAL REGULATIONS AT NO ADDITIONAL COST TO THE PROJECT.

16. 12 GAUGE TRACER WIRE SHALL BE USED ON ALL PVC PIPE AND WARNING TAPE SHALL BE PLACED 1' ABOVE ALL PIPE. PAYMENT IS CONSIDERED SUBSIDIARY TO THE WATER LINE.

17. THE MINIMUM DISTANCE BETWEEN TEES, CROSSES, VALVES, AND BENDS SHALL BE 5'-0".

18. THE CONTRACTOR SHALL NOTIFY ALL PROPERTY OWNERS ALONG THE ROUTE OF THE WATER LINE AT LEAST 48 HOURS PRIOR TO THE START OF THE CONSTRUCTION.

19. ALL WATER LINE TRENCHES BENEATH PROPOSED OR EXISTING PAVEMENT SHALL BE COMPACTED IN LIFTS.

20. A MINIMUM DISTANCE OF 36" SHALL BE MAINTAINED WHEN CROSSING THE PATH OF STORM SEWER PIPING.

21. THE CONTRACTOR SHALL LOCATE ON THE GROUND WITH PAINT OR EASILY VISIBLE MEANS ALL UNDERGROUND UTILITIES PRIOR TO ANY CONSTRUCTION. CONFLICTS OR DISCREPANCIES SHALL BE BROUGHT TO THE ATTENTION OF THE ENGINEER IMMEDIATELY. THE UTILITIES SHOWN ARE ILLUSTRATED AS LOCATED ON THE GROUND BY LINE LOCATORS, SURVEY OF ABOVE GROUND STRUCTURES, AND ACCORDING TO UTILITY MAPS, AND ARE PROVIDED AS INFORMATION ONLY. PAYMENT IS CONSIDERED SUBSIDIARY TO THE WATER LINE.

22. THE CONTRACTOR SHALL COORDINATE WITH THE UTILITY COMPANIES CONCERNING CONFLICTS, RELOCATION, REMOVAL, AND INTERRUPTIONS OF SERVICE.

23. THE WORK REQUIRED TO RELOCATE, REMOVE, INSTALL, REPLACE, ETC. UTILITIES SHALL BE THE RESPONSIBILITY OF THE CONTRACTOR, WITHIN THE LIMITS OF THE WORK.

24. THE CONTRACTOR SHALL PRESERVE AND PROTECT ACCORDING TO THE INSTRUCTION OF THE UTILITY INVOLVED ANY "LIVE" UTILITIES LOCATED BY THE UTILITY COMPANY OR CONTRACTOR.

25. THE CONTRACTOR SHALL BE RESPONSIBLE FOR THE REPLACEMENT OF ALL CONCRETE, SIDEWALKS, WALLS, ETC. DAMAGED DURING CONSTRUCTION. ALL DISTURBED AREAS WITHIN PUBLIC RIGHT-OF-WAY SHALL BE RESTORED TO THE ORIGINAL CONDITION OR AS ACCEPTED BY THE OWNER. UNSTABLE OR PUMPING SUB-GRADE CONDITIONS MAY OCCUR DURING SITE PREPARATION. PAYMENT IS CONSIDERED AT NO COST TO PROJECT.

26. THE CONTRACTOR SHALL BE RESPONSIBLE FOR NOTIFYING THE ENGINEER IN ADVANCE OF ALL REQUIRED TESTING AND SECURING COPIES OF RESULTING REPORTS.

27. DRIVEWAY BORES TO EXTEND A MINIMUM OF 6 FEET BEYOND THE DRIVE'S EDGE.

28. RECONNECTION OF EXISTING WATER LINE IS TO BE CONSIDERED A SUBSIDIARY OBLIGATION TO THE WATER SERVICE LINE INSTALLATION.

TRAFFIC CONTROL NOTES

1. THE TRAFFIC CONTROL PLAN IS DEVELOPED IN CONFORMANCE WITH THE MANUAL ON UNIFORM TRAFFIC CONTROL DEVICES PART 6, 2009 EDITION. THE TRAFFIC CONTROL DEVICES INDICATED REPRESENT CONDITIONS KNOWN DURING PLAN DEVELOPMENT. IN THE EVENT ACTUAL PHYSICAL CONDITIONS WARRANT ADDITIONAL TRAFFIC CONTROL DEVICES, THEY SHALL BE INSTALLED IN CONFORMANCE WITH THE M.U.T.C.D. PART 6 AS DIRECTED BY THE ENGINEER. COST SHALL BE PAID FOR UNDER THE APPROPRIATE PAY ITEM.

2. ALL BLACK ON ORANGE CONSTRUCTION SIGNS SHALL BE FABRICATED USING TYPES IV OR VII FLUORESCENT ORANGE REFLECTIVE SHEETING MATERIAL FOR THE SIGN BACKGROUND.

3. THE CONTRACTOR SHALL PLACE ALL ADVANCE WARNING SIGNS BEFORE PROCEEDING WITH HIS WORK. SIGNS SHALL BE PLACED IN ORDER, IN THE DIRECTION OF TRAFFIC AND REMOVED IN REVERSE ORDER.

4. THE CONTRACTOR SHALL MAINTAIN AT LEAST ONE ACCESS TO BUSINESSES AND RESIDENCES DURING ALL PHASES OF CONSTRUCTION.

5. CONSTRUCTION SIGNS MOUNTED ON TEMPORARY SUPPORTS SHALL BE MOUNTED AT A MINIMUM HEIGHT OF 5 FEET.

6. FLAGGERS ARE TO BE USED WHEN DIRECTED BY THE ENGINEER. SIGNS SHALL BE PLACED AT THE APPROPRIATE TIME, AND SHALL BE COVERED OR REMOVED WHEN FLAGGERS ARE NOT ON DUTY AND DURING NON-WORKING HOURS.

7. ALL CONTRACTOR'S EMPLOYEES' PERSONAL VEHICLES, AND CONTRACTOR'S EQUIPMENT NOT IN OPERATION, SHALL BE PARKED A MINIMUM OF THIRTY (30) FEET FROM THE TRAVELED WAY DURING WORKING HOURS, AS NOT TO CREATE A HAZARD.

8. ALL TRAFFIC CONTROL DEVICES THAT ARE NOT APPLICABLE AT ANY SPECIFIC TIME SHALL BE COVERED OR REMOVED AS DIRECTED BY THE ENGINEER.

9. ALL SIGNS SHALL BE POST-MOUNTED IF THE WORK PERIOD EXCEEDS FOUR DAYS, EXCEPT FOR THOSE SIGNS WHICH ARE MOUNTED ON BARRICADES. FOR REPEATED DAY OPERATIONS, SIGNS MAY E MOUNTED ON TEMPORARY SUPPORTS AND REMOVED AT THE COMPLETION OF THE DAY'S OPERATION.

10. SIGNS ON TEMPORARY SUPPORTS ARE TO BE REMOVED OR COVERED WHEN NO WORK IS BEING PERFORMED OR AT THE COMPLETION OF THE DAY'S OPERATION.

11. CHANNELIZING DEVICES SHALL EXTEND TO A POINT WHERE THEY ARE VISIBLE TO APPROACHING TRAFFIC.

12. THE CONTRACTOR SHALL CLOSE THE LANE ADJACENT TO THE WORK AREA ANYTIME WORK OUTSIDE THE EXISTING TRAVEL LANES ENCROACHES WITHIN 2 FEET OF THE EXISTING EDGE OF PAVEMENT. LANE CLOSURES ARE NOT INDICATED IN PLANS AND WILL REQUIRE APPROVAL OF ALDOT DISTRICT MANAGER OR DESIGNATED REPRESENTATIVE.

13. MOVING OPERATIONS SHALL BE CONFINED TO ONE LANE IN THE DIRECTION OF TRAFFIC.

14. R16-3 AND R16-3a SIGNS SHALL BE REQUIRED FOR EVERY PROJECT ON STATE ROUTES AND INTERSTATE HIGHWAYS. THEY SHALL BE POSTED AT THE BEGINNING AND END OF THE PROJECT. AN R2-1 SIGN SHALL ALWAYS BE REQUIRED FOLLOWING AN R16-3 SIGN. ADDITIONAL R16-3 SIGNS SHALL BE POSTED AT A MAXIMUM THREE MILE INTERVALS THROUGHOUT THE PROJECT LIMITS. ADDITIONAL R16-3 SIGNS SHALL BE REQUIRED WITH A W3-5b SIGN AND R2-1 SIGN WHENEVER A REDUCTION IN SPEED IS REQUIRED.

15. WHEN A CONSTRUCTION WORK ZONE SPEED LIMIT REDUCTION IS REQUIRED, THE CONTRACTOR SHALL COVER OR REMOVE THE R2-1 (REGULATORY SPEED SIGNS) AND THE W3-5b (REDUCED SPEED AHEAD) SIGNS AT THE END OF THE WORK DAY UNLESS OTHERWISE DIRECTED BY THE ENGINEER.

16. CONSTRUCTION SIGNS MOUNTED ON A SINGLE OR DUAL SQUARE TUBULAR OR U-CHANNEL POST SHALL BE INSTALLED AS SHOWN ON SPECIAL DRAWING NOS. IHS-710-21 AND IHS-710-23.

17. THE CONTRACTOR AND THE CONSTRUCTION ENGINEER SHALL DISCUSS AND PLAN FOR THE HANDLING OF TRAFFIC FOR ALL HOLIDAYS BEFORE ANY WORK BEGINS. UNLESS OTHERWISE PRE-APPROVED BY THE ALDOT REGIONAL ENGINEER, THE FOLLOWING SHALL HOLD:

THE CONTRACTOR SHALL NOT HAVE A LANE CLOSURE DURING THE FOLLOWING PERIODS UNLESS OTHERWISE DIRECTED BY THE ENGINEER OR ALDOT:

FOR CHRISTMAS AND NEW YEAR'S DAY:
FROM 11:59 PM DECEMBER 23 THROUGH 11:59 PM JANUARY 2.

FOR NATIONAL MEMORIAL DAY AND LABOR DAY:
FROM 12:00 NOON THE FRIDAY BEFORE THE HOLIDAY THROUGH 11:59 PM THE DAY OF THE HOLIDAY.

FOR INDEPENDENCE DAY (THE 4TH OF JULY):
FROM 12:00 NOON THE DAY BEFORE THE HOLIDAY THROUGH 11:59 PM THE DAY OF THE HOLIDAY

FOR THANKSGIVING DAY:
FROM 12 NOON THE WEDNESDAY BEFORE THANKSGIVING DAY THROUGH 11:59 PM THE SUNDAY FOLLOWING THANKSGIVING DAY.

THE CONTRACTOR SHALL COORDINATE WITH THE ENGINEER AND LOCAL GOVERNMENT ON TRAFFIC AND/OR WORK RESTRICTIONS FOR LOCAL HOLIDAYS OR EVENTS NOT LISTED ON ALDOT'S LIST OF OFFICIAL STATE HOLIDAYS.

PROJECT CONTACTS

1. ENGINEER
THE KELLEY GROUP, LLC
EDWARD A. SMITH, PE
P: (256) 248-7030
E: EDWARD@KELLEYNETWORK.COM

2. WATER/SEWER UTILITY
TOWN OF LEXINGTON
JOSH RICHARDSON
P: (256) 443-8280

3. POWER UTILITY
TENNESSEE VALLEY AUTHORITY
WARREN HICKS
P: (256) 430-4804
E: WPHICKS@TVA.GOV

ABBREVIATIONS

ACQ'D	ACQUIRED
AC	ACRE
ALDOT	ALABAMA DEPARTMENT OF TRANSPORTATION
BM	BENCHMARK
BCCMP	BITUMINOUS COATED CORRUGATED METAL PIPE
BLDG	BUILDING
CC	CARRYING CAPACITY
CIP	CAST IRON PIPE
℄	CENTER LINE
CONC	CONCRETE
CU. YD.	CUBIC YARD
C&G	CURB AND GUTTER
DF	DESIGN FLOW
DIST	DISTANCE
DA	DRAINAGE AREA
DI	DUCTILE IRON
DIP	DUCTILE IRON PIPE
E	EASTING
ESMT	EASEMENT
EL	ELEVATION
FL	FLOWLINE
GPM	GALLONS PER MINUTE
GM	GAS METER
GV	GAS VALVE
GFCI	GROUND FAULT CIRCUIT INTERRUPTER
HC	HANDICAP
HDWL	HEADWALL
HW	HIGH WATER
HORIZ	HORIZONTAL
JCT	JUNCTION
JCT BOX	JUNCTION BOX
LF	LINEAR FEET
LP	LOW POINT
MB	MAILBOX
MH	MANHOLE
N	NORTHING
PC	POINT OF CURVATURE
PI	POINT OF INTERSECTION
PT	POINT OF TANGENCY
PL	PROPERTY LINE
RR	RAILROAD
R	RANGE
RCP	REINFORCED CONCRETE PIPE
REQ'D	REQUIRED
ROW	RIGHT OF WAY
RD	ROAD
SS	SANITARY SEWER
S	SECTION
SQ. YD.	SQUARE YARD
STA	STATION
ST	STREET
TBM	TEMPORARY BENCH MARK
T	TOWNSHIP
VERT	VERTICAL
VPC	VERTICAL POINT OF CURVATURE
VPI	VERTICAL POINT OF INTERSECTION
VPT	VERTICAL POINT OF TANGENCY
WM	WATER METER
WV	WATER VALVE
WP	WATERPROOF
WW	WINGWALL
YD	YARD

ALABAMA LICENSED No. 37989 PROFESSIONAL ENGINEER EDWARD AUTREY SMITH

5/2/24

REVISIONS			
#	DESCRIPTION	DATE	BY
1			
2			
3			
4			
5			
6			

GENERAL NOTES
CWSRF/ARPA SEWER SYSTEM IMPROVEMENTS
TOWN OF LEXINGTON
LAUDERDALE COUNTY
ALABAMA

THE KELLEY GROUP
• A CIVIL ENGINEERING COMPANY •
850 Corporate Pwky, Suite 104
Birmingham, Alabama 35242
301 N Dickson St.
Tuscumbia, AL 35674

ATTENTION:
THIS BAR = 1 INCH ON ORIGINAL DRAWING.
ADJUST SCALE IF THIS BAR ≠ 1 INCH.
1"

PROJECT NO: 220032
DRAWN BY: EAS
CHECKED BY: BWT
SCALE: AS NOTED
DATE: 05/2024

SHEET NO.
2

R:\2022\220032- LEXINGTON CWSRF 2022\7.0 CAD\PRODUCTION PLAN\220032 GENERAL NOTES.DWG

5/1/2024 1:19:40 PM

R:\2022\220032- LEXINGTON CWSRF 2022\7.0 CAD\PRODUCTION PLAN\220032 EX. LAGOON.DWG

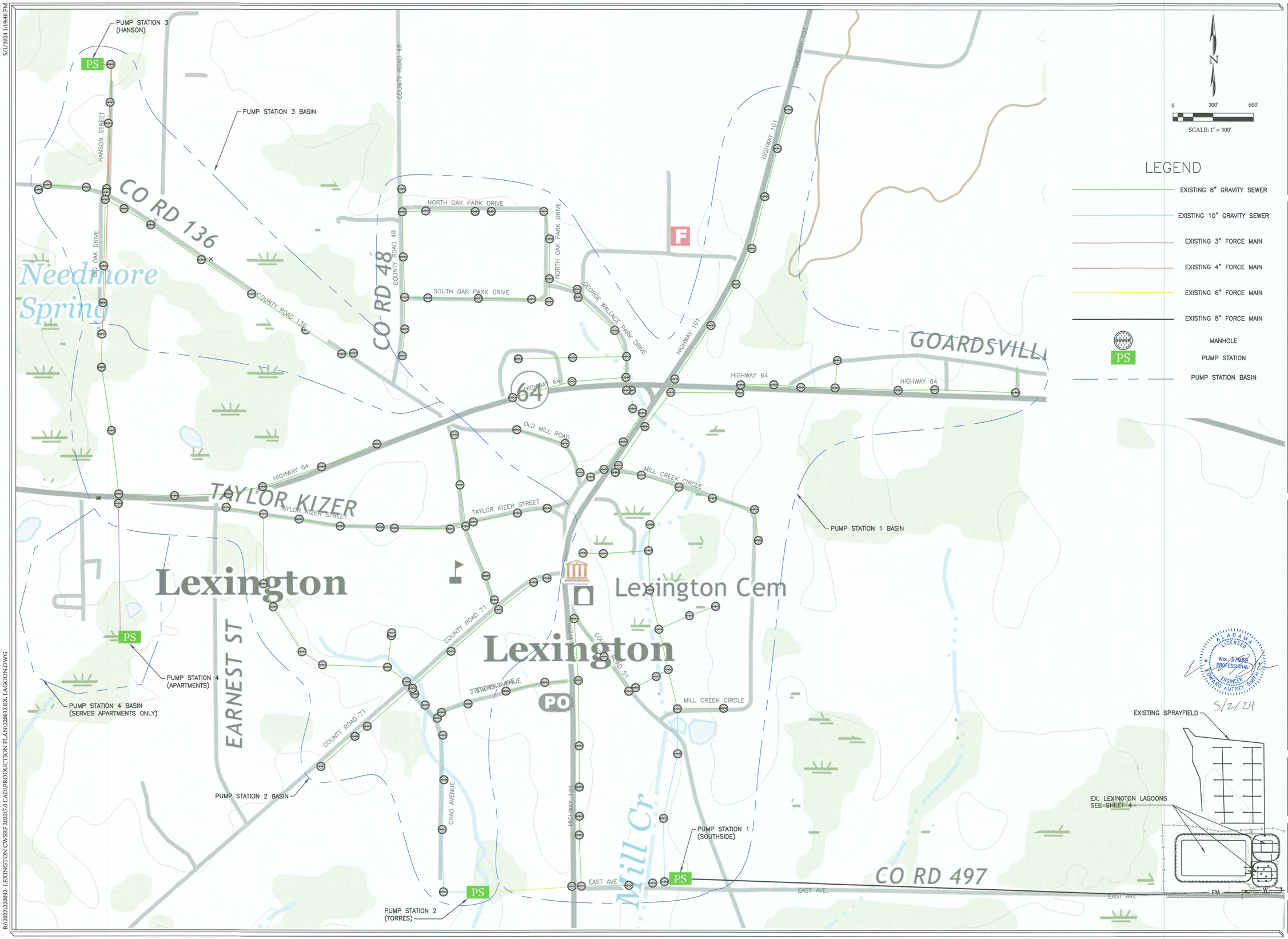

REVISIONS			
#	DESCRIPTION	DATE	BY
1			
2			
3			
4			
5			
6			

EXISTING SEWER SYSTEM
CWSRF/ARPA SEWER SYSTEM IMPROVEMENTS
TOWN OF LEXINGTON
LAUDERDALE COUNTY
ALABAMA

THE KELLEY GROUP
A CIVIL ENGINEERING COMPANY
850 Corporate Pwky, Suite 104
Birmingham, Alabama 35242
301 N Dickson St.
Tuscumbia, AL 35674

ATTENTION:
THIS BAR = 1 INCH ON ORIGINAL DRAWING.
ADJUST SCALE IF THIS BAR = 1 INCH.
1"

PROJECT NO: 220032
DRAWN BY: EAS
CHECKED BY: BWT
SCALE: AS NOTED
DATE: 05/2024

SHEET NO.
3

5/1/2024 1:19:41 PM

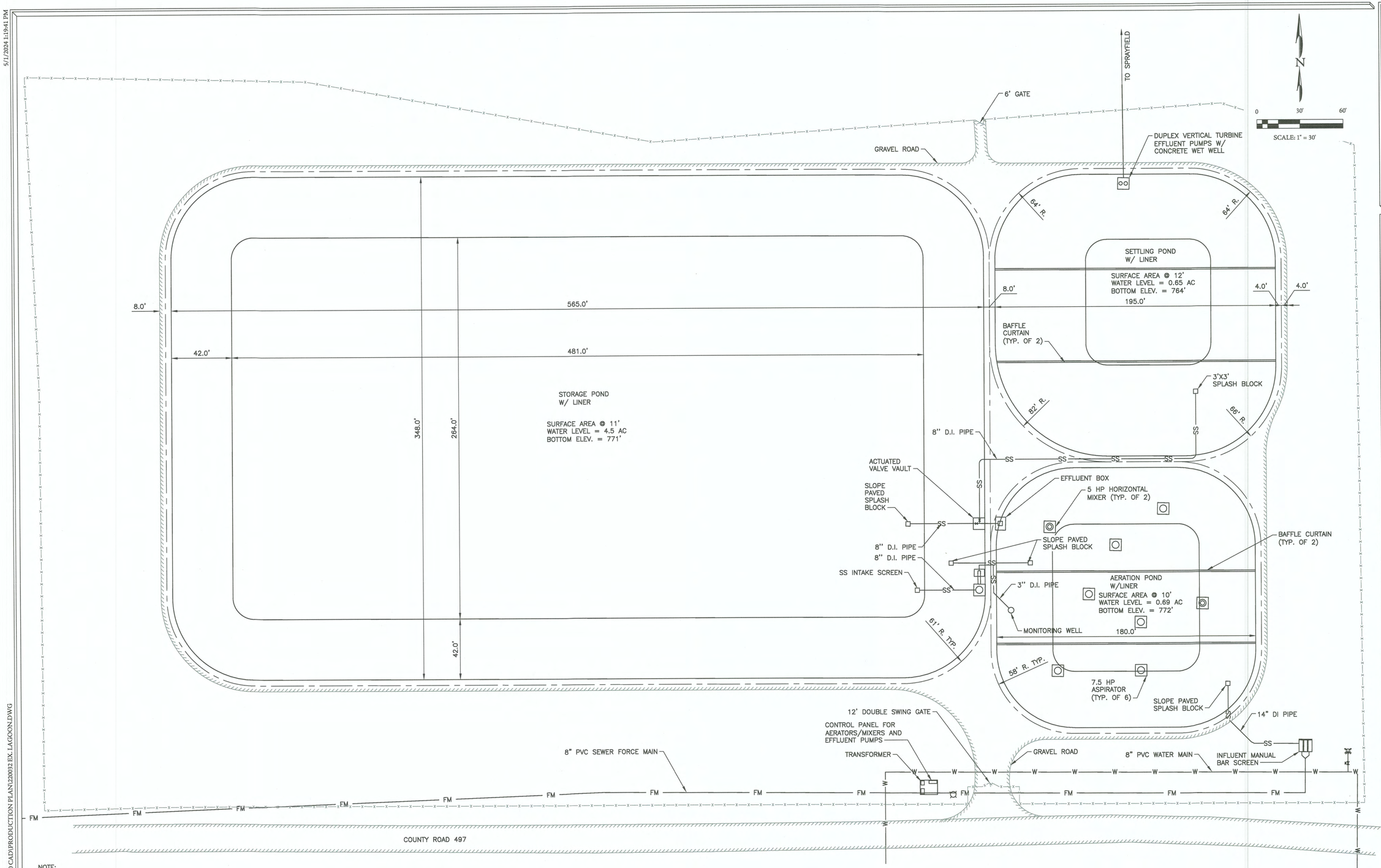

NOTE:

1. LOCATIONS AND DIMENSIONS SHOWN ARE PER 2001 AS-BUILT DRAWINGS BY OTHERS AND ENGINEER'S SITE VISITS. CONTRACTOR SHALL FIELD-VERIFY LOCATIONS, DIMENSIONS, MATERIALS, ETC. PRIOR TO COMMENCEMENT OF CONSTRUCTION

ALABAMA LICENSED No. 37939 PROFESSIONAL ENGINEER EDWARD AUTREY SMITH

5/2/24

REVISIONS

#	DESCRIPTION	DATE	BY
1			
2			
3			
4			
5			
6			

EXISTING TREATMENT FACILITY
CWSRF/ARPA SEWER SYSTEM IMPROVEMENTS
TOWN OF LEXINGTON
LAUDERDALE COUNTY
ALABAMA

THE KELLEY GROUP
• A CIVIL ENGINEERING COMPANY •
850 Corporate Pwky, Suite 104
Birmingham, Alabama 35242
301 N Dickson St.
Tuscumbia, AL 35674

ATTENTION:
THIS BAR = 1 INCH ON ORIGINAL DRAWING. ADJUST SCALE IF THIS BAR = 1 INCH.
1"

PROJECT NO: 220032
DRAWN BY: EAS
CHECKED BY: BWT
SCALE: AS NOTED
DATE: 05/2024

SHEET NO.
4

R:\2022\220032- LEXINGTON CWSRF 2022\7.0 CAD\PRODUCTION PLAN\220032-EX. LAGOON.DWG

5/1/2024 1:19:46 PM

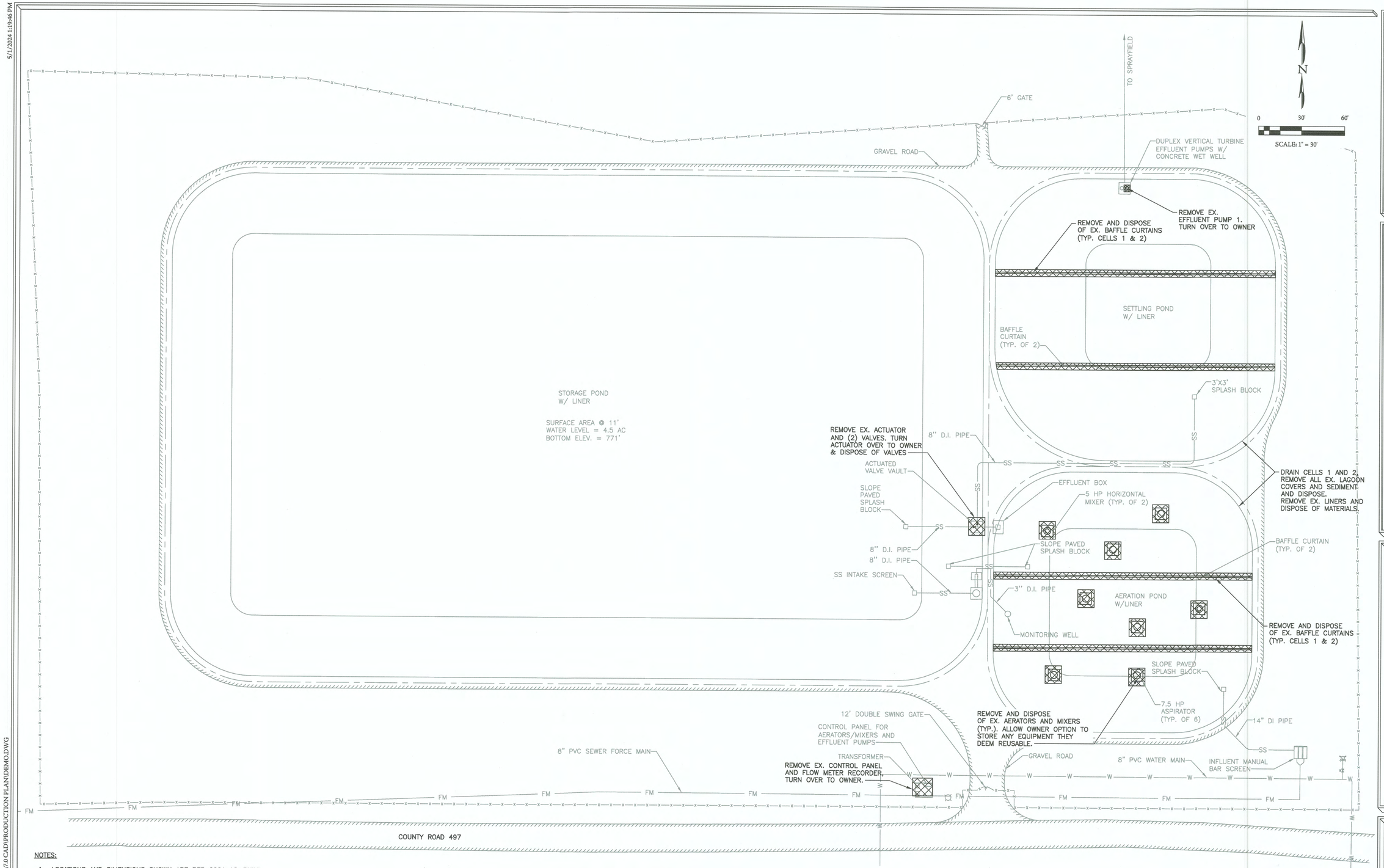

NOTES:

1. LOCATIONS AND DIMENSIONS SHOWN ARE PER 2001 AS-BUILT DRAWINGS BY OTHERS AND ENGINEER'S SITE VISITS. CONTRACTOR SHALL FIELD-VERIFY LOCATIONS, DIMENSIONS, MATERIALS, ETC. PRIOR TO COMMENCEMENT OF CONSTRUCTION
2. CONTRACTOR SHALL CLEAR, GRUB, AND SPRAY WITH HERBICIDE AND PRE-EMERGENT ALL LAGOON BANKS, GRAVEL ROADS, ETC. TO REMOVE ANY EXISTING VEGETATION PRIOR TO COMMENCEMENT OF CONSTRUCTION.
3. CONTRACTOR SHALL INSTALL AND START-UP BYPASS PUMPING SYSTEM PRIOR TO COMMENCEMENT OF DEMOLITION. SYSTEM SHALL BE BYPASSED SUCH THAT SEWAGE IS PUMPED FROM IMMEDIATELY DOWNSTREAM OF INFLUENT SCREEN TO STORAGE POND FOR THE DURATION OF CONSTRUCTION. CONTRACTOR SHALL SUBMIT BYPASS PUMPING PLAN TO ENGINEER FOR APPROVAL PRIOR TO INSTALLATION.

ALABAMA LICENSED No. 37989 PROFESSIONAL ENGINEER EDWARD AUTRET SMITH III
5/2/24

R:\2022\220032- LEXINGTON CWSRF 2022\7.0 CAD\PRODUCTION PLAN\DEMO.DWG

REVISIONS

#	DESCRIPTION	DATE	BY
1			
2			
3			
4			
5			
6			

DEMOLITION PLAN
CWSRF/ARPA SEWER SYSTEM IMPROVEMENTS
TOWN OF LEXINGTON
LAUDERDALE COUNTY
ALABAMA

THE KELLEY GROUP
A CIVIL ENGINEERING COMPANY
850 Corporate Pwky, Suite 104
Birmingham, Alabama 35242
301 N Dickson St.
Tuscumbia, AL 35674

ATTENTION:
THIS BAR = 1 INCH ON ORIGINAL DRAWING. ADJUST SCALE IF THIS BAR ≠ 1 INCH.

PROJECT NO: 220032
DRAWN BY: EAS
CHECKED BY: BWT
SCALE: AS NOTED
DATE: 05/2024

SHEET NO.
5

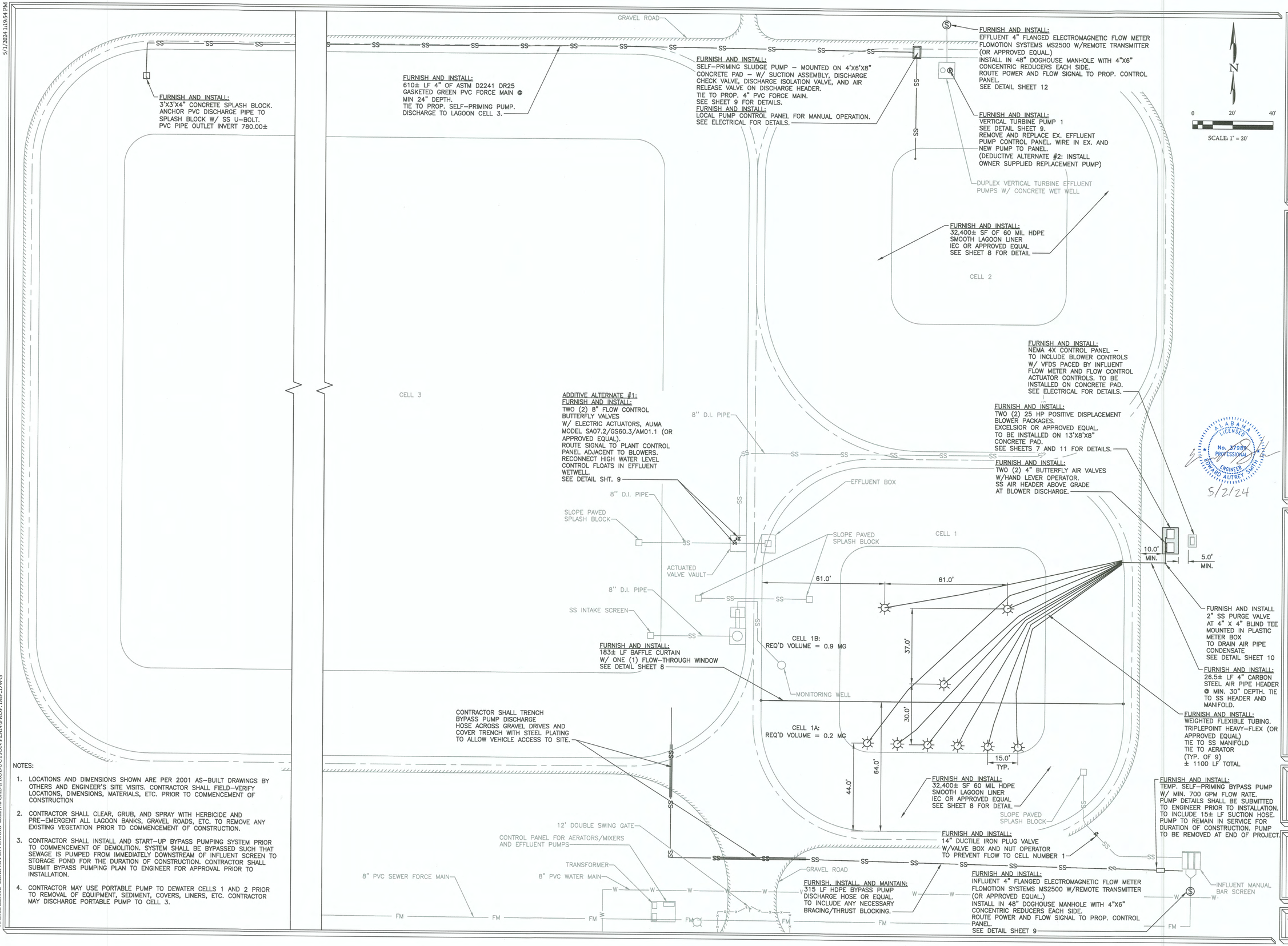

NOTES:

1. LOCATIONS AND DIMENSIONS SHOWN ARE PER 2001 AS-BUILT DRAWINGS BY OTHERS AND ENGINEER'S SITE VISITS. CONTRACTOR SHALL FIELD-VERIFY LOCATIONS, DIMENSIONS, MATERIALS, ETC. PRIOR TO COMMENCEMENT OF CONSTRUCTION
2. CONTRACTOR SHALL CLEAR, GRUB, AND SPRAY WITH HERBICIDE AND PRE-EMERGENT ALL LAGOON BANKS, GRAVEL ROADS, ETC. TO REMOVE ANY EXISTING VEGETATION PRIOR TO COMMENCEMENT OF CONSTRUCTION.
3. CONTRACTOR SHALL INSTALL AND START-UP BYPASS PUMPING SYSTEM PRIOR TO COMMENCEMENT OF DEMOLITION. SYSTEM SHALL BE BYPASSED SUCH THAT SEWAGE IS PUMPED FROM IMMEDIATELY DOWNSTREAM OF INFLUENT SCREEN TO STORAGE POND FOR THE DURATION OF CONSTRUCTION. CONTRACTOR SHALL SUBMIT BYPASS PUMPING PLAN TO ENGINEER FOR APPROVAL PRIOR TO INSTALLATION.
4. CONTRACTOR MAY USE PORTABLE PUMP TO DEWATER CELLS 1 AND 2 PRIOR TO REMOVAL OF EQUIPMENT, SEDIMENT, COVERS, LINERS, ETC. CONTRACTOR MAY DISCHARGE PORTABLE PUMP TO CELL 3.

REVISIONS

#	DESCRIPTION	DATE	BY
1			
2			
3			
4			
5			
6			

PROPOSED IMPROVEMENTS PLAN
CWSRF/ARPA SEWER SYSTEM IMPROVEMENTS
TOWN OF LEXINGTON
LAUDERDALE COUNTY
ALABAMA

THE KELLEY GROUP
• A CIVIL ENGINEERING COMPANY •
850 Corporate Pwky, Suite 104
Birmingham, Alabama 35242
301 N Dickson St.
Tuscumbia, AL 35674

ATTENTION:
THIS BAR = 1 INCH ON ORIGINAL DRAWING. ADJUST SCALE IF THIS BAR ≠ 1 INCH.
1"

PROJECT NO: 220032
DRAWN BY: EAS
CHECKED BY: BWT
SCALE: AS NOTED
DATE: 05/2024

SHEET NO.
6

5/1/2024 1:19:54 PM
R:\2022\220032- LEXINGTON CWSRF 2022\7.0 CAD\PRODUCTION PLAN\PROP. IMP.DWG

ARES AERATOR

TYPICAL INSTALLATION ARRANGEMENT
WITH MANIFOLDS AND HEAVYFLEX

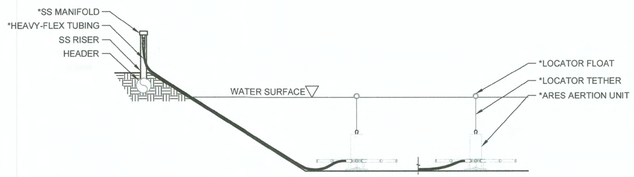

TYPICAL POND CROSS-SECTION
NTS

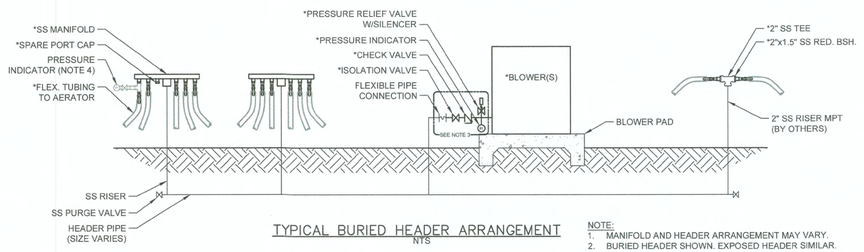

TYPICAL BURIED HEADER ARRANGEMENT
NTS

NOTE:
1. MANIFOLD AND HEADER ARRANGEMENT MAY VARY.
2. BURIED HEADER SHOWN. EXPOSED HEADER SIMILAR.
3. VERIFY BLOWER PACKAGE INCLUSIONS.
4. CONTRACTOR SHALL PROVIDE PRESSURE INDICATORS WHERE REQ'D TO ACHIEVE AIR BALANCING.
5. ITEMS MARKED WITH AN ASTERISK (*) TYPICALLY PROVIDED BY TPE. CHECK SCOPE OF SUPPLY DOCUMENTS TO VERIFY.

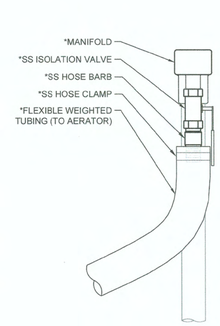

SIDE VIEW

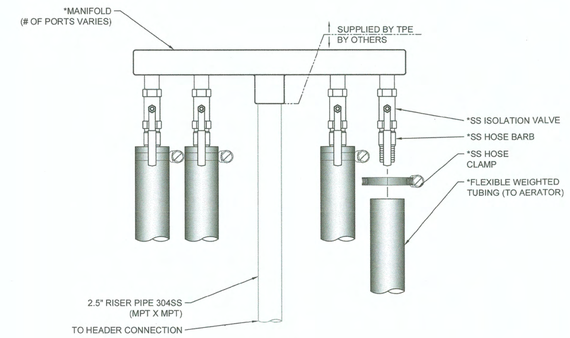

FRONT VIEW

4 PORT MANIFOLD DETAIL
NTS

NOTE:
1. 4- PORTS SHOWN. OTHER PORT QUANTITIES SIMILAR. SEE PLANS FOR QUANTITY, SIZE AND LOCATION OF MANIFOLDS.
2. CAP OFF UNUSED PORTS.
3. FOR 1 OR 2 AERATORS, A 2" RISER PIPE AND THREADED STAINLESS FITTINGS MAY BE USED IN LIEU OF A WELDED MANIFOLD.

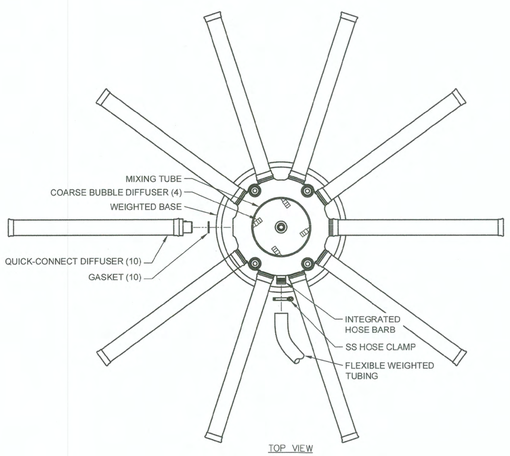

TOP VIEW

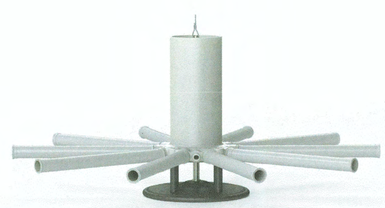

3D MODEL RENDERING

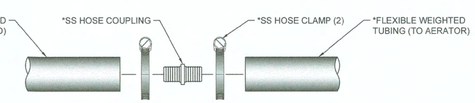

TUBE COUPLING DETAIL
NTS

NOTE:
1. TUBING TYPICALLY PROVIDED IN 100' COILS. ONSITE COUPLING MAY BE REQUIRED. REFER TO LAYOUT.

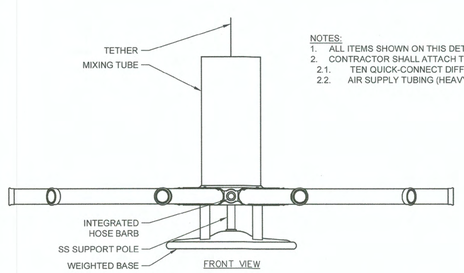

FRONT VIEW

NOTES:
1. ALL ITEMS SHOWN ON THIS DETAIL PROVIDED BY TPE.
2. CONTRACTOR SHALL ATTACH THE FOLLOWING:
   2.1. TEN QUICK-CONNECT DIFFUSERS AND GASKETS.
   2.2. AIR SUPPLY TUBING (HEAVY-FLEX) WITH SS HOSE-CLAMP.

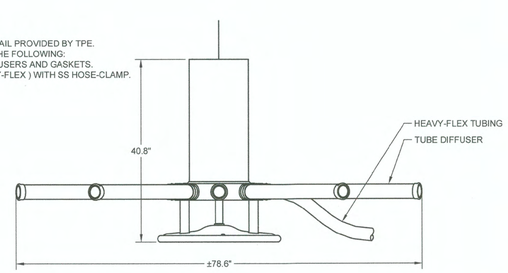

SIDE VIEW

ARES AERATOR
NTS

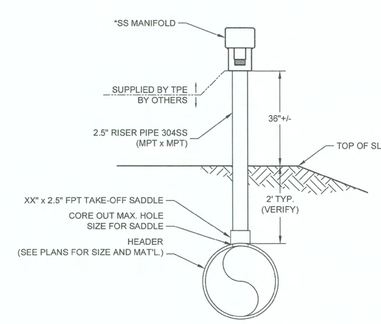

NEW HEADER TO MANIFOLD DETAIL
NTS

NOTE:
1. BURIED HEADER SHOWN. EXPOSED HEADER SIMILAR.

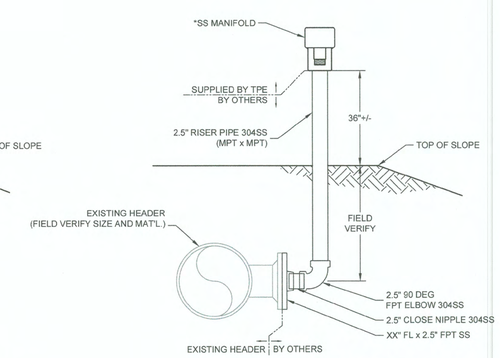

EXISTING HEADER TO MANIFOLD DETAIL
NTS

NOTE:
1. BURIED HEADER SHOWN. EXPOSED HEADER SIMILAR.
2. VERIFY BRANCH SIZE, LOCATION AND TYPE..

ALABAMA LICENSED No. 37989 PROFESSIONAL ENGINEER EDWARD AUTREY SMITH III
5/2/24

REVISIONS

#	DESCRIPTION	DATE	BY
1			
2			
3			
4			
5			
6			

AERATOR DETAILS
CWSRF/ARPA SEWER SYSTEM IMPROVEMENTS
TOWN OF LEXINGTON
LAUDERDALE COUNTY
ALABAMA

THE KELLEY GROUP
• A CIVIL ENGINEERING COMPANY •
850 Corporate Pwky, Suite 104
Birmingham, Alabama 35242
301 N Dickson St.
Tuscumbia, AL 35674

ATTENTION:
THIS BAR = 1 INCH ON ORIGINAL DRAWING. ADJUST SCALE IF THIS BAR ≠ 1 INCH.
1"

PROJECT NO: 220032
DRAWN BY: EAS
CHECKED BY: BWT
SCALE: AS NOTED
DATE: 05/2024

SHEET NO.
7

5/1/2024 1:20:00 PM
R:\2022\220032- LEXINGTON CWSRF 2022\7.0 CAD\PRODUCTION PLAN\PROP. IMP.-DWG

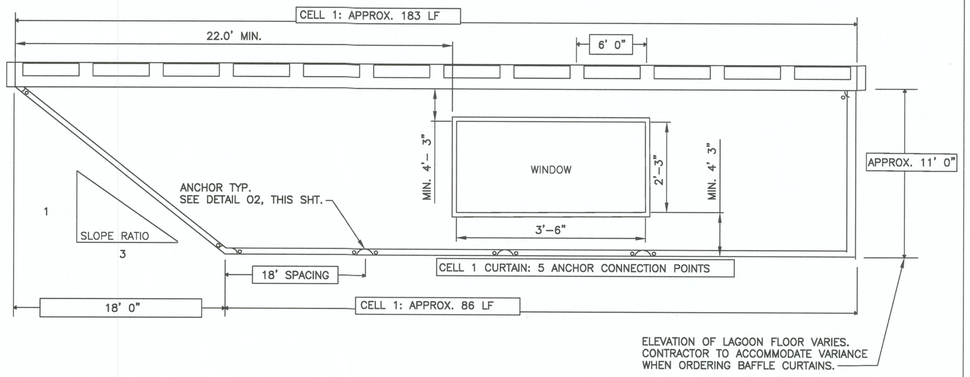

BAFFLE CURTAIN NOTES:

MANUFACTURER TO CONFIRM WINDOW SIZE AND PLACEMENT TO ENSURE BAFFLE CURTAIN STABILITY AND ADEQUATE FLOW IS ACHIEVED.

NOTE: CURTAIN SIZED FOR .155 MGD
1 SQ. FT. PER 30 GPM
.155 MGD = 223.2 GPM / 30 GPM = 7.44 SQ. FT. MIN.
WINDOW AREA: 3.5' X 2.25' = 7.875 SQ. FT.

FIELD DIMENSIONS WILL BE REQUIRED TO BEGIN PRODUCTION OF THE BAFFLE CURTAINS TO ACCOUNT FOR LAGOON FLOOR VARIANCE AND PROPER FLOW DIVERSION ONCE INSTALLED.

CONTRACTOR IS RESPONSIBLE FOR FOR CERTIFYING LAGOON WIDTHS, BOTTOM WIDTH, SIDE SLOPES, ETC. AND SHALL PROVIDE CORRECT BAFFLE CURTAIN DIMENSIONS WHEN PROVIDING SUBMITTALS TO ENGINEER, PRIOR TO ORDERING MATERIALS.

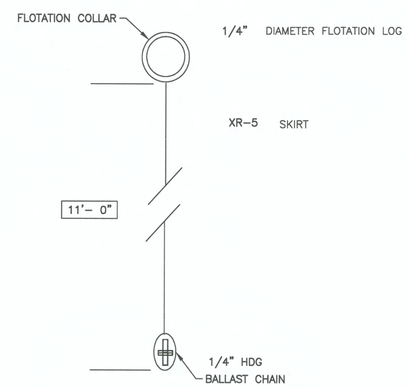

01 BAFFLE CURTAIN LAYOUT DETAIL

SCALE: N.T.S.

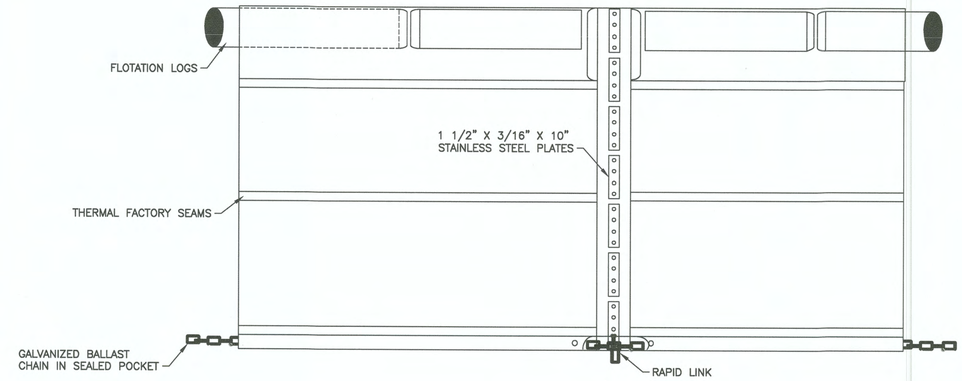

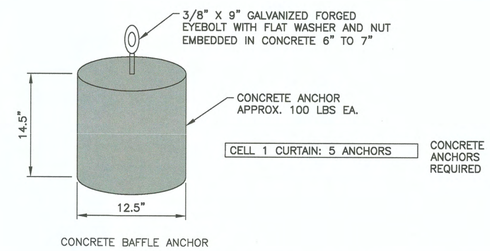

02 BAFFLE CURTAIN CONNECTION DETAIL

SCALE: N.T.S.

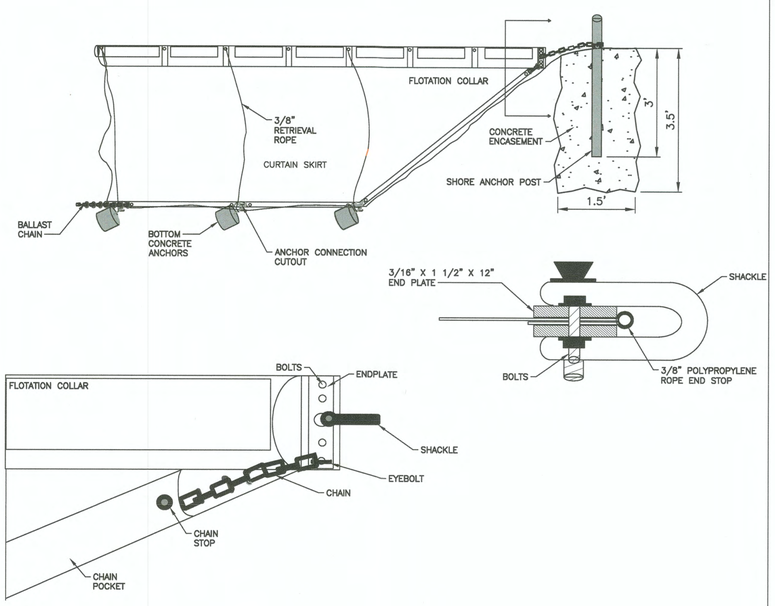

03 BAFFLE CURTAIN DETAIL

SCALE: N.T.S.

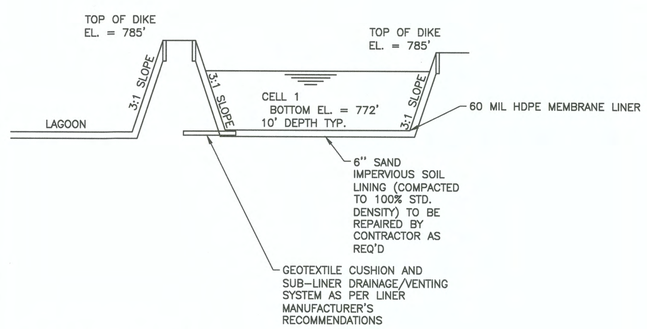

NOTE: CONTRACTOR SHALL CUT LINER IN AROUND ALL CONCRETE VAULTS, VALVE BOXES, PIPE STUBS, ETC. AND SEAL PROTRUSIONS PER LINER MANUFACTURER'S RECOMMENDATIONS.

4 CELL 1 CROSS SECITON

SCALE: N.T.S.

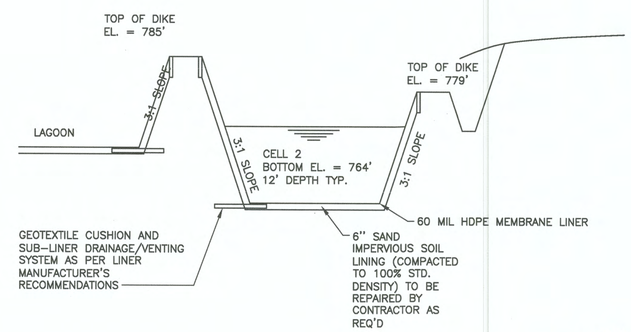

NOTE:
CONTRACTOR SHALL CUT LINER IN AROUND ALL CONCRETE VAULTS, VALVE BOXES, PIPE STUBS, ETC. AND SEAL PROTRUSIONS PER LINER MANUFACTURER'S RECOMMENDATIONS.

5 CELL 2 CROSS SECITON

SCALE: N.T.S.

ALABAMA LICENSED No. 37489 PROFESSIONAL ENGINEER BRYAND AUTREY SMITH
5/2/24

REVISIONS

#	DESCRIPTION	DATE	BY
1			
2			
3			
4			
5			
6			

MISCELLANEOUS DETAILS
CWSRF/ARPA SEWER SYSTEM IMPROVEMENTS
TOWN OF LEXINGTON
LAUDERDALE COUNTY
ALABAMA

THE KELLEY GROUP
A CIVIL ENGINEERING COMPANY
850 Corporate Pwky, Suite 104
Birmingham, Alabama 35242
301 N Dickson St.
Tuscumbia, AL 35674

ATTENTION:
THIS BAR = 1 INCH ON ORIGINAL DRAWING. ADJUST SCALE IF THIS BAR = 1 INCH.

PROJECT NO: 220032
DRAWN BY: EAS
CHECKED BY: BWT
SCALE: AS NOTED
DATE: 05/2024

SHEET NO.
8

5/1/2024 1:20:03 PM
R:\2022\220032- LEXINGTON CWSRF 2022\7.0 CAD\PRODUCTION PLAN\DROP: IMP.DWG

NOTE:
CONTRACTOR SHALL EMPLOY DIVER TO PLUG 8" PIPE PRIOR TO REPLACING FLOW CONTROL VALVES, OR ALTERNATIVE METHOD TO TEMPORARILY STOP FLOW AS DESIGNED BY CONTRACTOR AND APPROVED BY ENGINEER.

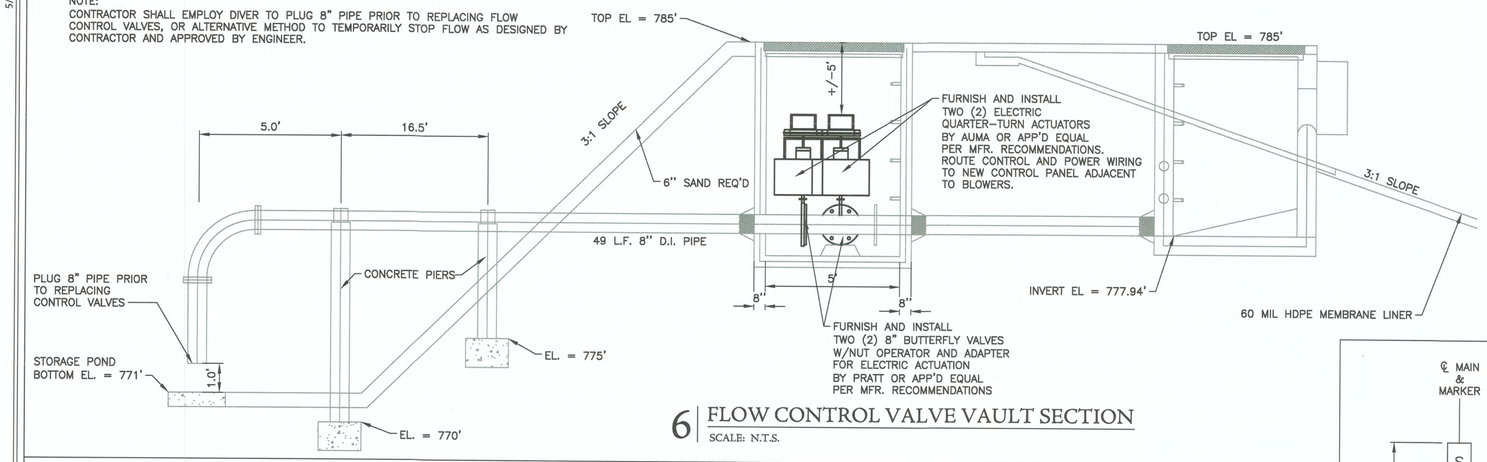

6 FLOW CONTROL VALVE VAULT SECTION
SCALE: N.T.S.

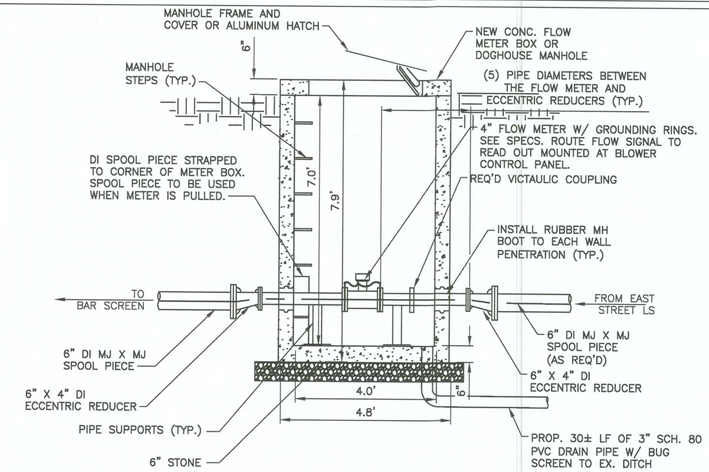

7 INFLUENT FLOW METER & METER BOX DETAIL
SCALE: 1" = 2'

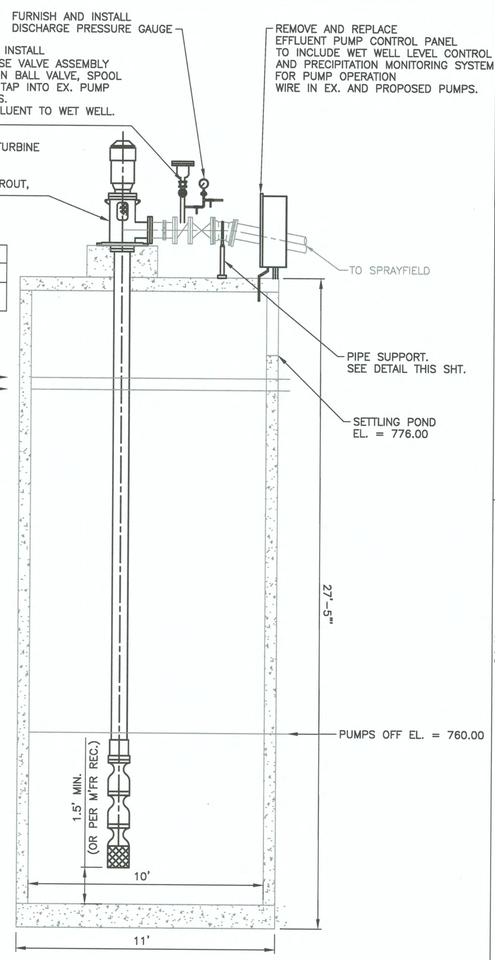

PROPOSED PUMPS – BASIS OF DESIGN					
ID	MANUFACTURER	MODEL #	POWER	PHASE	VOLTS
P1	FAIRBANKS MORSE	10D 7100AW	40	3	460

NOTES:

1. CONTRACTOR TO VERIFY PUMP PAD SIZE WITH SHOP DRAWINGS PRIOR TO CONSTRUCTION. SHOP DRAWINGS SHALL SHOW ALL DIMENSIONS AND SIZES OF PUMP, PAD, AND PIPING TO ENSURE ALL ITEMS FIT PROPERLY TO THE EXISTING PIPING THAT WILL REMAIN.
2. ALL NEW AND EXISTING DUCTILE IRON PIPING TO BE PRIMED, PAINTED, AND STENCILED WITH THE NAME AND FLOW DIRECTION.
3. CONTRACTOR TO INSTALL PUMP PER MANUFACTURERS RECOMMENDATIONS. CONTRACTOR TO SHIM PUMP MOUNTING PLATE AS NEEDED TO LEVEL THE PUMP. AFTER PUMP HAS BEEN LEVELED, SECURELY BOLT TO THE CONC. PAD AND PROPERLY ALIGN PER MANUFACTURER SPECIFICATIONS. ALIGNMENT OF THE PUMP SHALL BE CHECKED AND FOUNDATION BOLTS FIRMLY TIGHTENED DOWN. MONITOR PUMPS FOR VIBRATION USING STANDARD ELECTRONIC TESTING METHODS AFTER INSTALLATION. CONTRACTOR SHALL PROVIDE FULL PUMP START-UP REPORT FROM SUPPLIER TO ENGINEER.
4. CONTRACTOR SHALL RETURN 6 MONTHS AFTER INITIAL INSTALLATION TO VERIFY VIBRATION AND SHAFT STRETCH AND CHECK AMP DRAW TO SEE IF IMPELLERS ARE WEARING ON THE VOLUTE.
5. CONCRETE PAD SHALL BE 3,000 PSI.
6. FOUNDATION BOLTS SHALL BE ENCLOSED BY A SLEEVE 2 TO 4 DIAMETERS LARGER THAN THE BOLT TO ALLOW MOVEMENT FOR PROPER ALIGNMENT WITH THE PUMP MOUNTING HOLES.
7. ALL EXISTING SPOOL PIECES, FITTINGS, VALVES, ETC. TO REMAIN SHALL BE CLEANED, PRIMED, AND PAINTED.
8. CONTRACTOR SHALL REPLACE ALL BOLTS ON EXIST. PIPING AND FITTINGS TO REMAIN.
9. CONTRACTOR TO FIELD VERIFY EXIST. OPENING IN WET WELL FOR VERTICAL TURBINE PUMP. CONTRACTOR TO MODIFY EXIST. OPENING AS NECESSARY FOR INSTALLATION OF NEW PUMP.
10. CONTRACTOR SHALL USE EXISTING PUMP PAD IF INADEQUATE CONDITION BASED ON FIELD ASSESSMENT AND VERIFICATION BY ENGINEER.
11. IF NEW PUMP PAD IS REQ'D, CONTRACTOR SHALL DRILL AND EPOXY DOWEL ANY NEW CONCRETE FOR PUMP BASE INTO EX. WET WELL TOP. CONTRACTOR SHALL USE U-BARS FOR REINFORCEMENT OF PROPOSED CONCRETE PUMP BASE.

08 EFFLUENT PUMP SECTION VIEW
SCALE: 1" = 3'

NOTES

1. SANITARY SEWER MARKER TO BE GREEN IN COLOR.
2. SANITARY SEWER MARKER TO BE LABELED "SEWER".
3. MARKERS TO BE SPACED ALONG CENTERLINE OF MAIN EVERY 400 FEET AND AT ALL VALVES, FITTINGS, AND CHANGES OF DIRECTION OF PIPE.
4. MARKERS TO BE FIBERGLASS AND MANUFACTURED BY CARSONITE, H & 2 INDUSTRIES, OR APPROVED EQUAL.
5. MARKERS ARE CONSIDERED SUBSIDIARY TO THE PIPE.

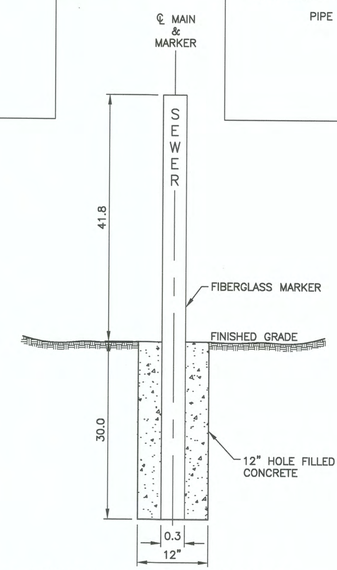

09 SEWER MARKER DETAIL
SCALE: N.T.S.

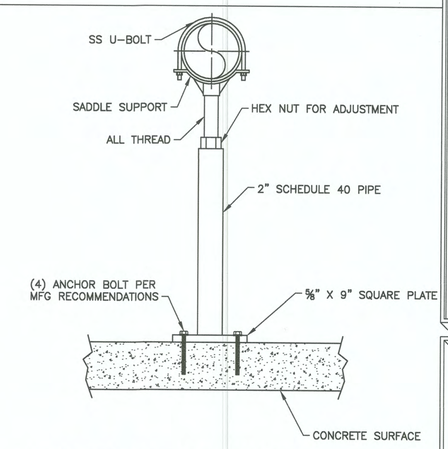

10 TYP. PIPE SUPPORT DETAIL
SCALE: N.T.S.

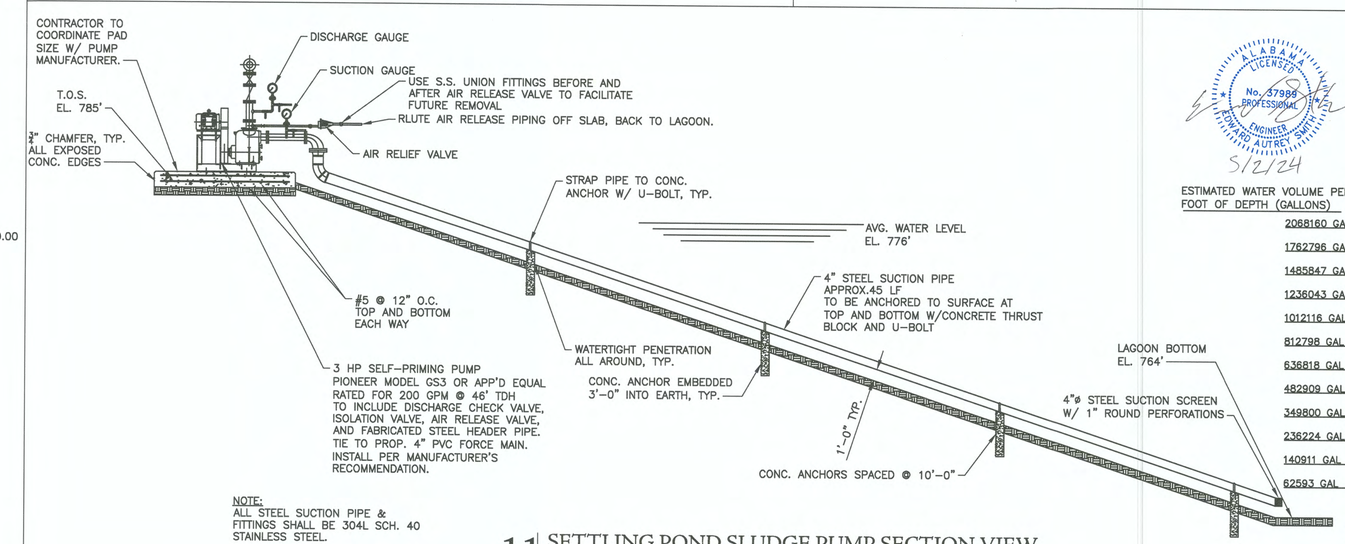

NOTE:
ALL STEEL SUCTION PIPE & FITTINGS SHALL BE 304L SCH. 40 STAINLESS STEEL.

11 SETTLING POND SLUDGE PUMP SECTION VIEW
SCALE: N.T.S.

ALABAMA LICENSED No. 37988 PROFESSIONAL ENGINEER EDWARD AUTREY SMITH III
5/2/24

ESTIMATED WATER VOLUME PER FOOT OF DEPTH (GALLONS)

2068160 GAL
1762796 GAL
1485847 GAL
1236043 GAL
1012116 GAL
812798 GAL
636818 GAL
482909 GAL
349800 GAL
236224 GAL
140911 GAL
62593 GAL

REVISIONS

#	DESCRIPTION	DATE	BY
1			
2			
3			
4			
5			
6			

MISCELLANEOUS DETAILS
CWSRF/ARPA SEWER SYSTEM IMPROVEMENTS
TOWN OF LEXINGTON
LAUDERDALE COUNTY
ALABAMA

THE KELLEY GROUP
• A CIVIL ENGINEERING COMPANY •
850 Corporate Pwky, Suite 104
Birmingham, Alabama 35242
301 N Dickson St.
Tuscumbia, AL 35674

ATTENTION:
THIS BAR = 1 INCH ON ORIGINAL DRAWING. ADJUST SCALE IF THIS BAR = 1 INCH.
1"

PROJECT NO: 220032
DRAWN BY: EAS
CHECKED BY: BWT
SCALE: AS NOTED
DATE: 05/2024

SHEET NO.
9

5/1/2024 1:20:08 PM
R:\2022\220032- LEXINGTON CWSRF 2022\7.0 CAD\PRODUCTION PLAN\PROP_IMP.DWG

5/1/2024 1:20:13 PM

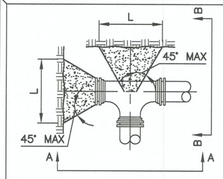

PLAN VIEW

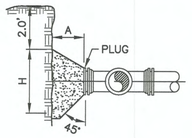

SECTION A-A

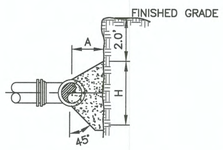

SECTION B-B

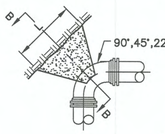

PLAN

MINIMUM CONCRETE THRUST BLOCK DIMENSIONS				
PIPE DIA. (INCHES)	DEGREE OF BEND	A (FT.)	L (FT.)	H (FT.)
6"	90°	1.8	2.5	2.0
	45°	1.5	2.5	1.5
	22 ½°	1.0	1.5	1.0
	11 ¼°	1.0	1.5	1.0
	TEE/PLUG	1.5	2.5	1.8
8"	90°	2.0	4.0	3.0
	45°	2.0	3.0	2.0
	22 ½°	1.0	2.5	2.0
	11 ¼°	1.0	2.0	1.0
	TEE/PLUG	2.0	4.0	2.0
12"	90°	2.0	6.0	4.0
	45°	2.0	4.0	3.0
	22 ½°	2.0	3.0	2.0
	11 ¼°	1.0	2.0	2.0
	TEE/PLUG	2.0	5.0	4.0

NOTES:

1. CONCRETE SHALL HAVE 4,000 PSI STRENGTH AT 28 DAYS.
2. THE VALUES IN THE TABLE ARE BASED ON 2,000 PSF SOIL BEARING CAPACITY AND 250 PSI WORKING PRESSURE.
3. THRUST BLOCK DESIGN FOR OTHER DESIGN CIRCUMSTANCES OR PIPE LARGER THAN 12" SHALL BE REVIEWED ON AN INDIVIDUAL BASIS BY THE ENGINEER.
4. HEIGHT OF CONCRETE THRUST BLOCK ABOVE THE PIPE CENTERLINE IS ½ THE H DIMENSION.
5. PROVIDE A 10 MIL PLASTIC BARRIER BETWEEN CONCRETE AND PIPE. OBTAIN INSPECTOR'S APPROVAL PRIOR TO PLACEMENT OF CONCRETE.
6. CONCRETE FOR THRUST BLOCK TO BE POURED AGAINST UNDISTURBED EARTH.

12 | THRUST BLOCK DETAILS

SCALE: N.T.S.

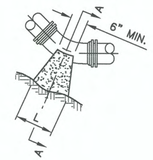

ELEVATION

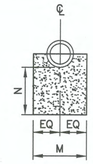

SECTION A-A

MINIMUM CONCRETE THRUST BLOCK DIMENSIONS				
PIPE DIA. (INCHES)	DEGREE OF BEND	L	M	N
3"	45°	10"	1'-0"	8"
	22 ½°	6"	1'-0"	8"
	11 ¼°	6"	1'-0"	8"
4"	45°	1'-0"	1'-0"	8"
	22 ½°	8"	1'-0"	8"
	11 ¼°	6"	1'-0"	8"
6"	45°	1'-2"	1'-2"	8"
	22 ½°	10"	1'-2"	8"
	11 ¼°	6"	1'-2"	8"
8"	45°	1'-9"	1'-4"	8"
	22 ½°	11"	1'-2"	8"
	11 ¼°	8"	1'-4"	8"
10"	45°	2'-5"	1'-6"	1'-0"
	22 ½°	1'-3"	1'-4"	9"
	11 ¼°	8"	1'-6"	8"
12"	45°	2'-8"	2'-0"	1'-2"
	22 ½°	1'-4"	1'-6"	9"
	11 ¼°	8"	2'-0"	8"

NOTES:

1. CONCRETE SHALL HAVE 4,000 PSI STRENGTH AT 28 DAYS.
2. THE VALUES IN THE TABLE ARE BASED ON 2,000 PSF SOIL BEARING CAPACITY AND 150 PSI WORKING PRESSURE.
3. THRUST BLOCK DESIGN FOR OTHER DESIGN CIRCUMSTANCES OR PIPE LARGER THAN 12" SHALL BE REVIEWED ON AN INDIVIDUAL BASIS BY THE ENGINEER.
4. PROVIDE A 10 MIL PLASTIC BARRIER BETWEEN CONCRETE AND PIPE. OBTAIN INSPECTOR'S APPROVAL PRIOR TO PLACEMENT OF CONCRETE.
5. CONCRETE FOR THRUST BLOCK TO BE POURED AGAINST UNDISTURBED EARTH.

13 | THRUST BLOCK DETAILS (LOWER VERT. FITT'GS.)

SCALE: N.T.S.

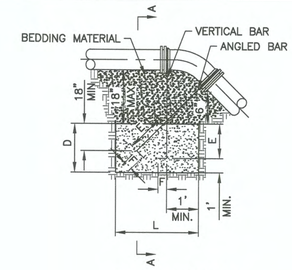

ELEVATION

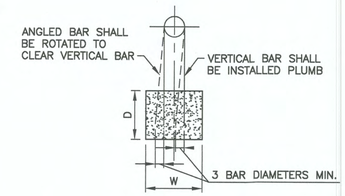

SECTION A-A

MINIMUM CONCRETE THRUST BLOCK DIMENSIONS							
PIPE DIA. (INCHES)	DEGREE OF BEND	L	W	D	E	F	REINF. BARS
3"	45°	2'-0"	2'-0"	1'-6"	1'-0"	6"	#7
	22 ½°	1'-6"	1'-6"	1'-6"	1'-0"	6"	#7
	11 ¼°	1'-6"	1'-6"	1'-6"	1'-0"	6"	#7
4"	45°	2'-6"	2'-6"	2'-0"	1'-0"	6"	#7
	22 ½°	2'-0"	2'-0"	1'-6"	1'-0"	6"	#7
	11 ¼°	1'-6"	1'-6"	1'-6"	1'-0"	6"	#7
6"	45°	3'-0"	3'-0"	2'-0"	1'-0"	9"	#7
	22 ½°	2'-6"	2'-6"	2'-6"	1'-0"	6"	#7
	11 ¼°	2'-0"	2'-0"	1'-6"	1'-0"	6"	#7
8"	45°	3'-6"	3'-6"	2'-6"	1'-3"	10"	#8
	22 ½°	2'-9"	2'-9"	2'-3"	1'-3"	9"	#8
	11 ¼°	2'-0"	2'-0"	2'-0"	1'-3"	6"	#8
10"	45°	4'-0"	4'-0"	2'-9"	1'-4"	11"	#8
	22 ½°	3'-6"	3'-6"	2'-3"	1'-4"	10"	#8
	11 ¼°	2'-3"	2'-3"	2'-0"	1'-4"	8"	#8
12"	45°	4'-6"	4'-6"	3'-0"	1'-5"	1'-0"	#8
	22 ½°	4'-0"	4'-0"	2'-6"	1'-5"	10"	#8
	11 ¼°	2'-6"	2'-6"	2'-3"	1'-5"	9"	#8

NOTES:

1. CONCRETE SHALL HAVE 4,000 PSI STRENGTH AT 28 DAYS.
2. THE VALUES IN THE TABLE ARE BASED ON 2,000 PSF SOIL BEARING CAPACITY AND 150 PSI WORKING PRESSURE.
3. THRUST BLOCK DESIGN FOR OTHER DESIGN CIRCUMSTANCES OR PIPE LARGER THAN 12" SHALL BE REVIEWED ON AN INDIVIDUAL BASIS BY THE ENGINEER.
4. PROVIDE A 10 MIL PLASTIC BARRIER BETWEEN CONCRETE AND PIPE. OBTAIN INSPECTOR'S APPROVAL PRIOR TO PLACEMENT OF CONCRETE.
5. CONCRETE FOR THRUST BLOCK TO BE POURED AGAINST UNDISTURBED EARTH.
6. 3" MINIMUM COVER OVER ALL BARS.

14 | THRUST BLOCK DETAILS (UPPER VERTICAL FITTINGS)

SCALE: N.T.S.

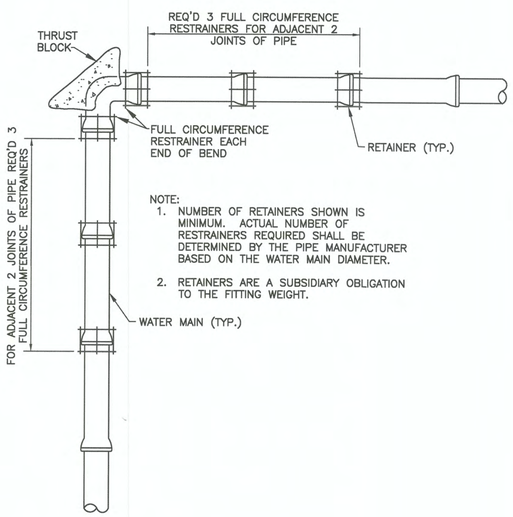

NOTE:

1. NUMBER OF RETAINERS SHOWN IS MINIMUM. ACTUAL NUMBER OF RESTRAINERS REQUIRED SHALL BE DETERMINED BY THE PIPE MANUFACTURER BASED ON THE WATER MAIN DIAMETER.
2. RETAINERS ARE A SUBSIDIARY OBLIGATION TO THE FITTING WEIGHT.

15 | DETAIL OF RESTRAINERS AT ALL BENDS

SCALE: N.T.S.

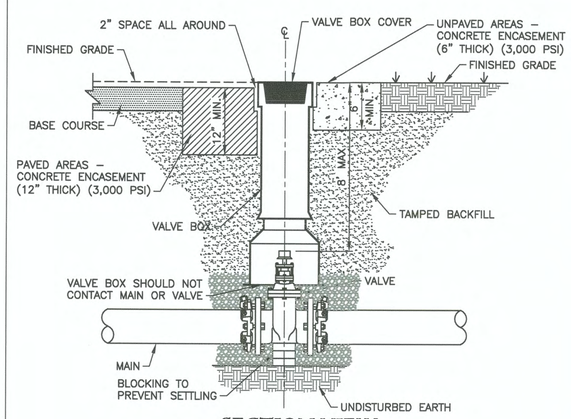

SECTION VIEW

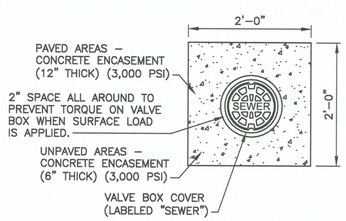

PLAN

NOTES

1. ONLY MANUFACTURED VALVE BOX EXTENSIONS SHALL BE ALLOWED.
2. VALVE OPERATING NUT MUST BE EXTENDED SO THAT THE DEPTH IS NO GREATER THAN 8' (ft.) FROM THE SURFACE USING A MANUFACTURER APPROVED EXTENSION KIT.
3. PRECAST CONCRETE ENCASEMENT IS ALLOWED OUTSIDE OF PAVED AREAS.
4. CONCRETE, BACKFILL, VALVE BOX, AND COVER ARE CONSIDERED SUBSIDIARY TO THE VALVE.
5. VALVE BOX AND CONCRETE TO MEET HS-20 LOAD RESTRICTION.

16 | VALVE BOX DETAIL

SCALE: N.T.S.

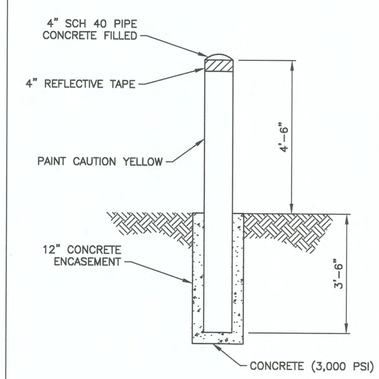

17 | BOLLARD DETAIL

SCALE: N.T.S.

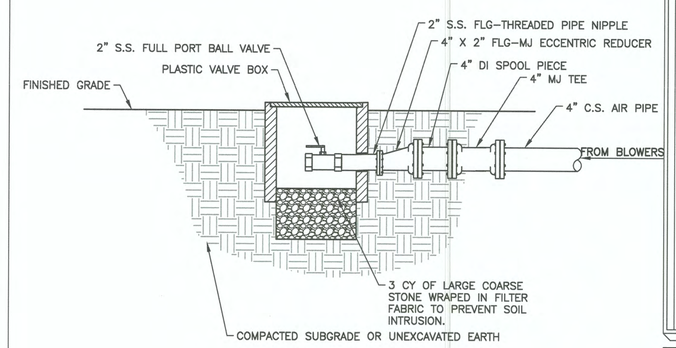

NOTE:

1. AIR PIPE SHALL BE INSTALLED SUCH THAT PURGE VALVE LIES AT LOWEST POINT OF AIR PIPE TO ALLOW FOR CONDENSATION TO DRAIN TO VALVE.
2. CONTRACTOR TO PROVIDE VALVE MARKER. SEE SPECS.

ALABAMA LICENSED No. 37589 PROFESSIONAL ENGINEER EDWARD AUTREY SMITH III

5/2/24

18 | PURGE VALVE DETAIL

SCALE: N.T.S.

REVISIONS

#	DESCRIPTION	DATE	BY
1			
2			
3			
4			
5			
6			

MISCELLANEOUS DETAILS

CWSRF/ARPA SEWER SYSTEM IMPROVEMENTS
TOWN OF LEXINGTON
LAUDERDALE COUNTY
ALABAMA

THE KELLEY GROUP
A CIVIL ENGINEERING COMPANY
850 Corporate Pwky, Suite 104
Birmingham, Alabama 35242
301 N Dickson St.
Tuscumbia, AL 35674

ATTENTION:
THIS BAR = 1 INCH ON ORIGINAL DRAWING. ADJUST SCALE IF THIS BAR ≠ 1 INCH.

PROJECT NO: 220032
DRAWN BY: EAS
CHECKED BY: BWT
SCALE: AS NOTED
DATE: 05/2024

SHEET NO. 10

R:\2022\220032- LEXINGTON CWSRF 2022\7.0 CAD\PRODUCTION PLAN\DETAILS.DWG

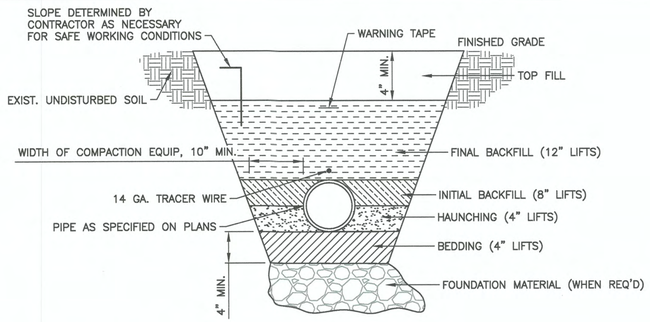

BACKFILL MATERIAL TYPES					
LAYING CONDITION	BEDDING	HAUNCHING	INITIAL BACKFILL	FINAL BACKFILL	TOP FILL
3	S2	S2	S2	S2	S4
4	A1	A1	S2	S2	S4
5	A1	A1	A1	S2	S4

BACKFILL MATERIAL DESCRIPTION	
A1	LIMESTONE AGGREGATE MEETING ALDOT REQUIREMENTS FOR A NO. 57 STONE OR SMALLER
S2	EXCAVATED AND RE-USED MATERIAL OR IMPORTED BORROW, GRADED, FREE OF LUMPS LARGER THAN 3 INCHES, ROCKS LARGER THAN 2 INCHES, AND DEBRIS
S4	EXCAVATED AND RE-USED MATERIAL, GRADED, FREE OF ROOTS, ROCKS LARGER THAN $\frac{1}{2}$", SUBSOIL, DEBRIS. LARGE WEEDS, AND FOREIGN MATTER.

NOTES:

1. SLOPE, BENCHING, SHORING, ETC. TO BE DETERMINED BY THE CONTRACTOR. CONTRACTOR IS SOLELY RESPONSIBLE FOR COMPLYING WITH ALL APPLICABLE OSHA REGULATIONS FOR OPEN TRENCH EXCAVATIONS.
2. THE CONTRACTOR SHALL BE RESPONSIBLE FOR SELECTING AND UTILIZING THE APPROPRIATE MEANS AND METHODS OF CONSTRUCTION TO ENSURE THAT THE ENTIRE AREAS UNDER THE HAUNCHES OF THE PIPE ARE FILLED WITH THE REQUIRED MATERIALS AND COMPACTED APPROPRIATELY.

19 | BEDDING AND BACKFILL

SCALE: N.T.S.

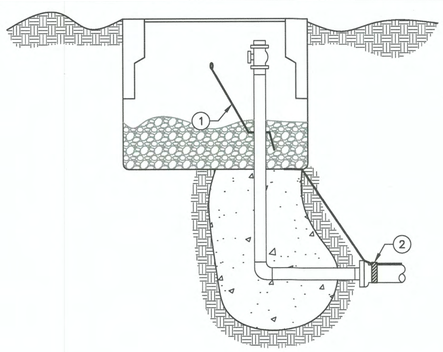

BLOFF ASSEMBLY ELEVATION

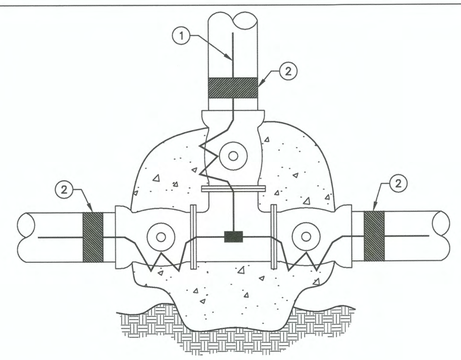

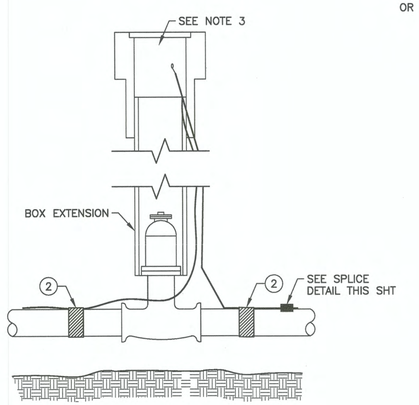

VALVE BOX ELEVATION

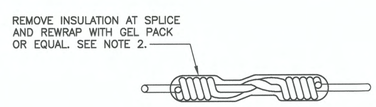

LEGEND	
ITEM #	DESCRIPTION
1	#12 SOLID AWG COPPER TRACER WIRE (DIR. BUR.) WITH THERMO-PLASTIC INSULATION. PLACE ON OUTSIDE OF RISER.
2	TAPE WIRE TO PIPE

NOTES

1. LOCATING WIRE SHALL BE INSTALLED WITH ALL PIPE. WIRE TO BE TAPED TO BASE OF CURB STOP.
2. LOCATE WIRE DIRECTLY ON TOP OF THE PIPE AND TAPE TO PIPE. (FOUR PLACES EVERY FULL PIPE SECTION.) WESTERN UNION SPLICE WITH GEL PACK, SOLDER OR OTHER EID APPROVED METHOD, NO ACID.
3. STRIP APPROXIMATELY 3 INCHES OF INSULATION AT THE TERMINATION OF THE WIRE IN THE VALVE OR METER BOX.
4. LEAVE 2 FEET OF TRACING WIRE AT TERMINATING ENDS.
5. INSTALL AN EXTRA VALVE BOX IF NECESSARY WHERE LOCATION WIRE IS TERMINATED AND SHOW ON THE PLANS.
6. THE CONTRACTOR SHALL TEST THE CONTINUITY OF THE FINISHED INSTALLATION.

20 | TRACER WIRE INSTALLATION

SCALE: N.T.S.

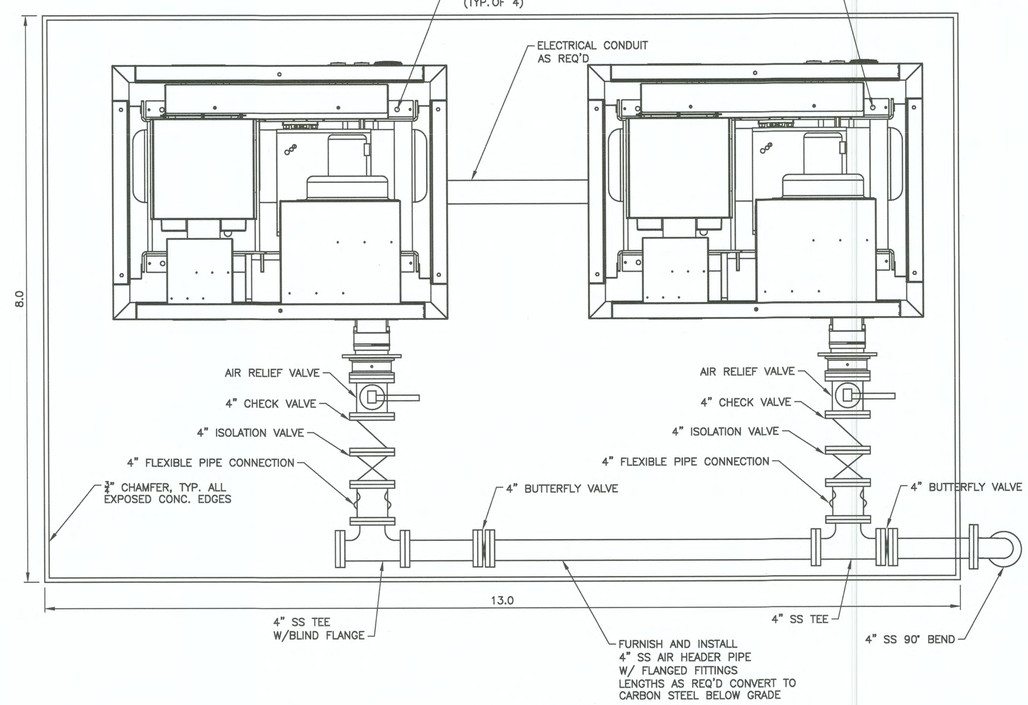

PLAN VIEW

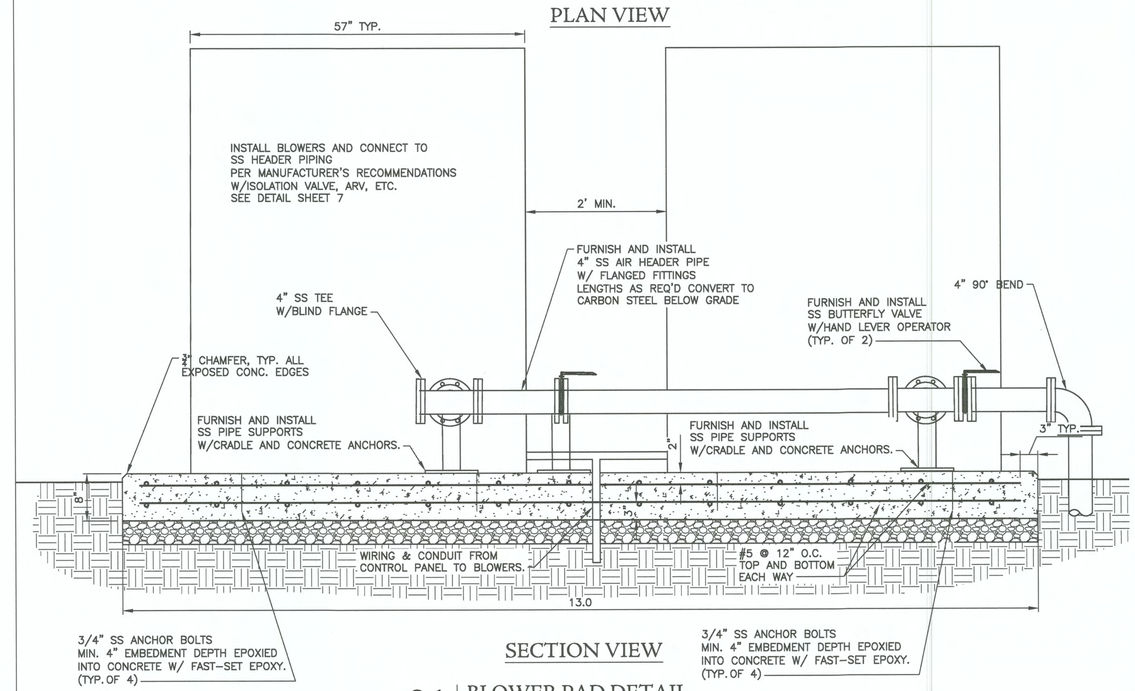

SECTION VIEW

21 | BLOWER PAD DETAIL

SCALE: 1" = 1'

ALABAMA LICENSED No. 37986 PROFESSIONAL ENGINEER EDWARD AUTREY SMITH
5/2/24

REVISIONS		
DESCRIPTION	DATE	BY
0		
1		
2		
3		
4		
5		
6		

MISCELLANEOUS DETAILS
CWSRF/ARPA SEWER SYSTEM IMPROVEMENTS
TOWN OF LEXINGTON
LAUDERDALE COUNTY
ALABAMA

THE KELLEY GROUP
• A CIVIL ENGINEERING COMPANY •
850 Corporate Pwky, Suite 104
Birmingham, Alabama 35242
301 N Dickson St.
Tuscumbia, AL 35674

ATTENTION:
THIS BAR = 1 INCH ON ORIGINAL DRAWING. ADJUST SCALE IF THIS BAR ≠ 1 INCH.
1"

PROJECT NO: 220032
DRAWN BY: EAS
CHECKED BY: BWT
SCALE: AS NOTED
DATE: 05/2024

SHEET NO.
11

5/1/2024 1:20:15 PM
R:\2022\220032- LEXINGTON CWSRF 2022\7.0 CAD\PRODUCTION PLAN\DETAILS.DWG

5/1/2024 1:20:15 PM

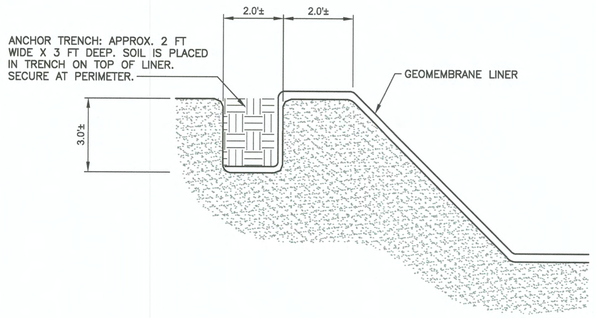

22 | ANCHOR TRENCH PERIMETER X-SECTION
SCALE: N.T.S.

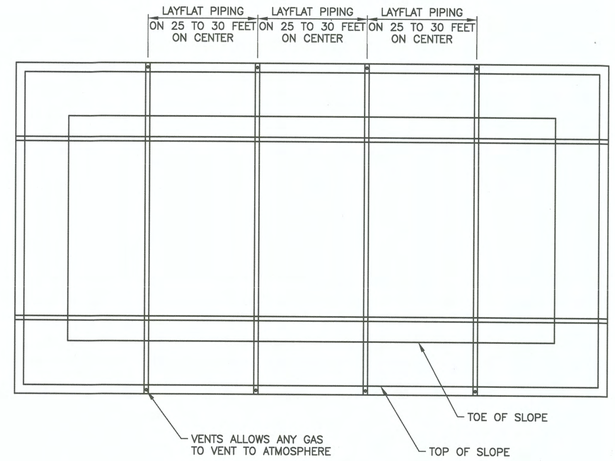

23 | LAYFLAT PIPING PLAN VIEW EXAMPLE
SCALE: N.T.S.

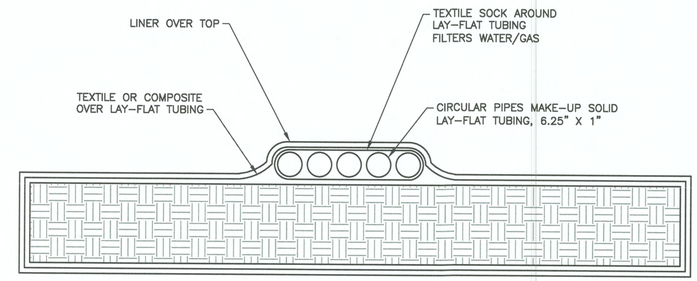

24 | LAYFLAT TUBING DETAIL
SCALE: N.T.S.

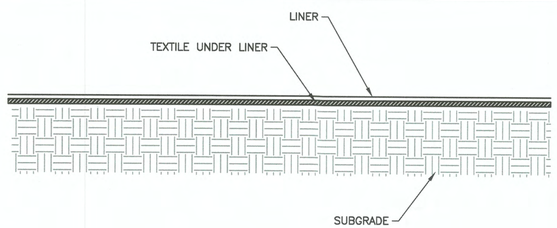

25 | TEXTILE UNDER LINER DETAIL
SCALE: N.T.S.

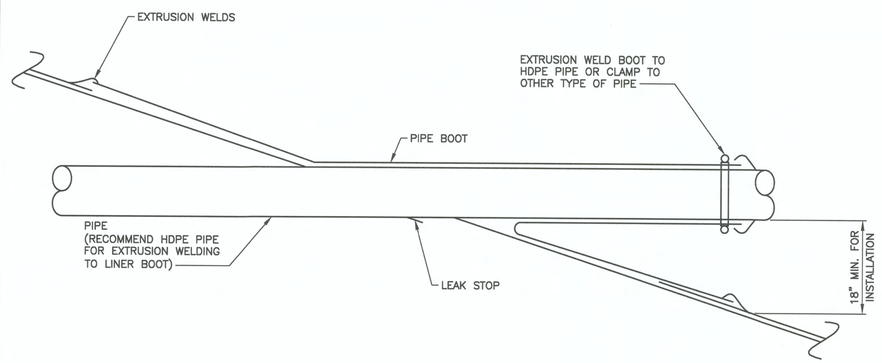

26 | PIPE PENETRATION ON SLOPE
SCALE: N.T.S.

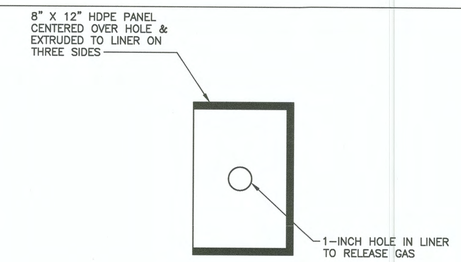

PLAN VIEW

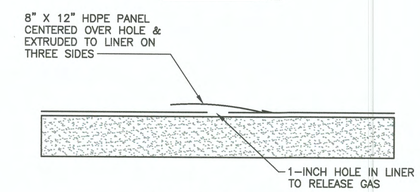

SECTION VIEW

27 | LINER POCKET VENT DETAIL
SCALE: N.T.S.

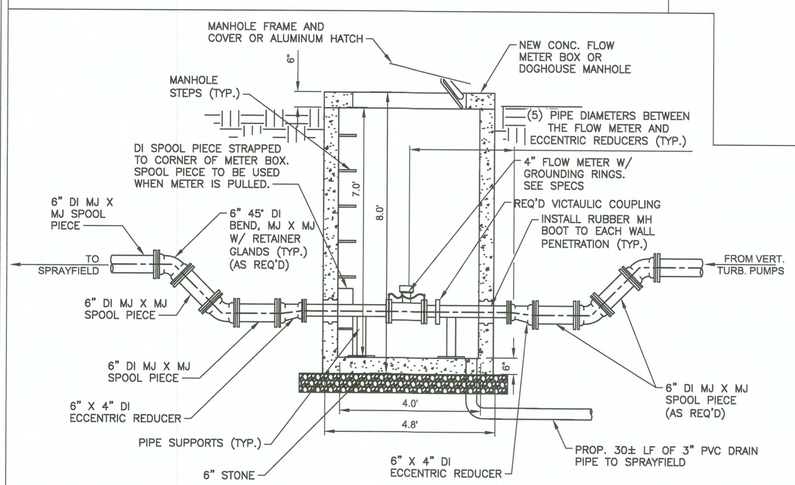

28 | EFFLUENT FLOW METER & METER BOX DETAIL
SCALE: N.T.S.

R:\2022\220032 - LEXINGTON CWSRF 2022\7.0 CAD\PRODUCTION PLAN\DETAILS.DWG

REVISIONS

#	DESCRIPTION	DATE	BY
1			
2			
3			
4			
5			
6			

MISCELLANEOUS DETAILS
CWSRF/ARPA SEWER SYSTEM IMPROVEMENTS
TOWN OF LEXINGTON
LAUDERDALE COUNTY
ALABAMA

THE KELLEY GROUP
• A CIVIL ENGINEERING COMPANY •
850 Corporate Pwky, Suite 104
Birmingham, Alabama 35242
301 N Dickson St.
Tuscumbia, AL 35674

ATTENTION:
THIS BAR = 1 INCH ON ORIGINAL DRAWING. ADJUST SCALE IF THIS BAR ≠ 1 INCH.
1"

PROJECT NO: 220032
DRAWN BY: EAS
CHECKED BY: BWT
SCALE: AS NOTED
DATE: 05/2024

ALABAMA LICENSED No. 37980 PROFESSIONAL ENGINEER EDWARD AUTREY SMITH III
5/2/24

SHEET NO.
12

5/1/2024 1:20:17 PM

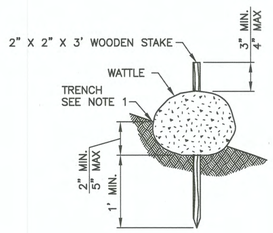

01 WATTLE DETAIL
SCALE: N.T.S.

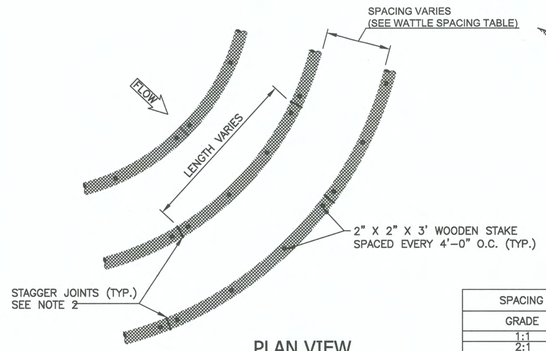

PLAN VIEW
N.T.S.

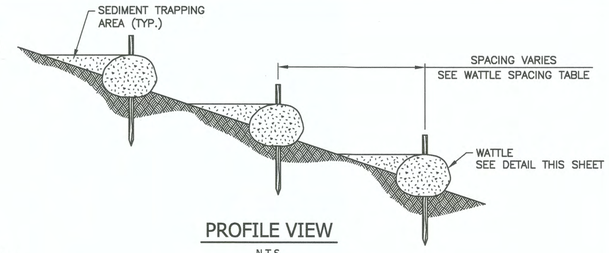

PROFILE VIEW
N.T.S.

SPACING LENGTHS PER GRADE	
GRADE	SPACING
1:1	10'-0"
2:1	20'-0"
3:1	30'-0"
4:1	40'-0"

WATTLE NOTES:

1. WATTLES SHALL BE INSTALLED ALONG CONTOURS.
2. SECURELY KNOT EACH END OF WATTLE. ABUT ADJACENT WATTLES TIGHTLY, END TO END, WITHOUT OVERLAPPING THE ENDS.
3. PILOT HOLES MAY BE DRIVEN THROUGH THE WATTLES AND INTO THE SOIL WHEN SOIL CONDITIONS REQUIRE.
4. WATTLES SHALL BE INSPECTED REGULARLY, AND IMMEDIATELY AFTER A RAINFALL PRODUCES RUNOFF, TO ENSURE THEY REMAIN THOROUGHLY ENTRENCHED AND IN CONTACT WITH THE SOIL.
5. CONTRACTOR SHALL PERFORM REGULAR MAINTENANCE ON WATTLES AND ALL BMPS MEASURES.

02 WATTLE SLOPE PROTECTION
SCALE: N.T.S.

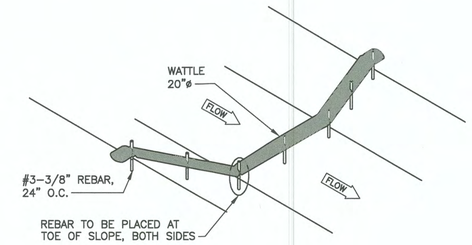

RECOMMENDED PLACEMENT INTERVAL BETWEEN SEDIMENT FILTER (DITCH CHECK) 100' UNLESS OTHERWISE SPECIFIED.

3 WATTLE DITCH CHECK DETAIL
SCALE: N.T.S.

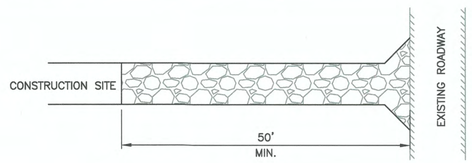

PLAN VIEW
N.T.S.

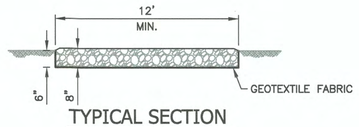

TYPICAL SECTION
N.T.S.

NOTES:

1. A STONE STABILIZED CONSTRUCTION ENTRANCE/EXIT SHALL BE CONSTRUCTED.
2. ALDOT #2 STONE TO BE USED FOR CONSTRUCTION ENTRANCE/EXIT.
3. A GEOTEXTILE FABRIC UNDERLINE SHALL BE INSTALLED.
4. CONTRACTOR TO VERIFY WITH PERMITTING AUTHORITY ANY PROJECT-SPECIFIC ENTRANCE SPECIFICATIONS.
5. PROVIDE TEMPORARY DRAINAGE AS REQUIRED.
6. THE COST OF THE STONE CONSTRUCTION ENTRANCE/EXIT SHALL BE A SUBSIDIARY OBLIGATION OF OTHER ITEMS OF WORK.

04 TEMPORARY CONSTRUCTION ENTRANCE/EXIT
SCALE: N.T.S.

STORMWATER POLLUTION PREVENTION PLAN EXHIBIT

1.0 GENERAL INFORMATION

A. PROJECT DESCRIPTION:

B. PROJECT OWNER:

C. CONSTRUCTION TYPE:

D. SOIL DISTURBANCE ACTIVITIES:
SITE GRADING, EXCAVATION, FILLING AND OTHER RELATED ACTIVITIES

E. SITE DESCRIPTION AND CHARACTERISTICS:
TOTAL SITE AREA: ACRES
TOTAL DISTURBED AREA: ACRES
RECEIVING WATER: LOCAL DITCHES

F. GENERAL PERMIT:
STORMWATER GENERAL PERMIT FOR CONSTRUCTION ACTIVITIES
PERMIT NO. ALR100000 (SITES >1 ACRE)

2.0 SEQUENCE OF MAJOR ACTIVITIES, CONTROL MEASURES, AND STABILIZATION DATES

MAJOR ACTIVITY	CONTROL MEASURES	TIMING/ SEQUENCE	RESPONSIBLE CONTRACTOR	DATE BEGAN	DATE COMPLETED TEMPORARILY OR PERMANENTLY	DATE STABILIZED
1. CLEARING, GRUBBING, ROUGH GRADING	1. STABILIZED CONSTRUCTION ENTRANCE 2. SILT FENCING 3. HAY BALES	CONSTRUCTED PRIOR TO AND DURING ACTIVITY				
2. UTILITY CONSTRUCTION (WATER, SEWER, ELECTRICAL)	1. STABILIZED TRENCHES	PRIOR TO INSTALLATION				
3. BUILDING FOUNDATION	1. CONSTRUCT/COORDINATE CONCRETE WASHOUT AREA	PRIOR TO PLACING CONCRETE				
4. BUILDING CONSTRUCTION	1. STABILIZE DENUDED AREAS WITH SEED AND MULCH	IMMEDIATELY AFTER ROUGH GRADING				
5. SITE PAVING	1. STORM DRAINAGE SYSTEM PROTECTION	PRIOR TO SETTING FORMS				
6. FINISH GRADING & LANDSCAPING	1. SOD, SEED, EROSION FABRIC, LANDSCAPE, FERTILIZE & WATER LANDSCAPING	AT COMPLETION OF FINISH GRADING				

3.0 GENERAL SWPPP NOTES

1. ALL EROSION CONTROL MEASURES SHALL MEET THE REQUIREMENTS OF SECTIONS 665 OF THE ALDOT SPECIFICATIONS.
2. CONTRACTOR TO OBTAIN GENERAL PERMIT ALR100000 AND COMPLY WITH ALL REQUIREMENTS, REPORTING PROCEDURES, RECORDS DATABASE, NOTIFICATIONS & OTHER REQUIREMENTS AS REQUIRED BY THE PERMIT.
3. CONTRACTOR TO POST NOTICE AT SITE IN ACCORDANCE WITH THE GENERAL PERMIT.
4. CONTRACTOR TO MAINTAIN ALL EROSION CONTROL MEASURES, IN EFFECTIVE OPERATING CONDITION, UNTIL PERMANENT GROUND COVER IS ESTABLISHED AND PAVING COMPLETED.
5. CONTRACTOR TO COMPLETE AND SUBMIT STORMWATER POLLUTION PREVENTION PLAN (SWPP) TO ALL APPLICABLE REGULATING AUTHORITIES.
6. CONTRACTOR TO COMPLETE AND SUBMIT NOTICE OF INTENT & NOTICE OF TERMINATION AS REQUIRED BY THE GENERAL PERMIT.
7. STABILIZATION MEASURES OF DISTURBED AREAS WHERE CONSTRUCTION HAS TEMPORARILY OR PERMANENTLY CEASED SHALL BE INITIATED WITHIN 14 CALENDAR DAYS, UNLESS EARTH DISTURBING ACTIVITIES ARE TO RESUME WITHIN 21 CALENDAR DAYS.
8. CONTRACTOR TO KEEP CONSTRUCTION ACTIVITIES, DEBRIS AND SEDIMENTATION WITHIN PROPERTY LINES AND SERVITUDES. ANY DEBRIS AND SEDIMENTATION ESCAPING THE CONSTRUCTION SITE SHALL BE IMMEDIATELY RECLAIMED BY THE CONTRACTOR. CONTRACTOR SHALL KEEP PUBLIC RIGHTS OF WAY AND STREETS CLEAN.
9. SEDIMENT & EROSION CONTROL DEVICES INDICATED ON PLAN SHELL BE CONSIDERED A MINIMUM STANDARD. ADDITIONAL DEVICES AS REQUIRED BY GOVERNING AUTHORITIES SHALL BE PROVIDED, INSTALLED, INSPECTED AND MAINTAINED BY THE CONTRACTOR AT NO DIRECT COST TO OWNER OR ENGINEER.
10. CONTRACTOR IS RESPONSIBLE FOR ALL FINES ASSOCIATED WITH THE DISCHARGE OF SEDIMENT, EROSION, OR POLLUTANTS CAUSED BY THIS WORK.
11. CONTRACTOR IS RESPONSIBLE FOR CLEANING OUT ALL STORM DRAINAGE STRUCTURES AFFECTED BY CONSTRUCTION OF THIS PROJECT, INCLUDING MANHOLES, FLUMES, PIPES, PONDS, ETC., PRIOR TO COMPLETION OF THE PROJECT.
12. AT THE END OF EACH WORK DAY AND AFTER EVERY RAINSTORM, CONTRACTOR WILL BE REQUIRED TO SWEEP AND REMOVE ALL DIRT, MUD, OR SILT THAT ACCUMULATES ON PUBLIC STREETS AS A RESULT OF CONSTRUCTION ACTIVITY FOR THIS PROJECT.
13. ENDANGERED/THREATENED SPECIES REVIEW AND CULTURAL/ARCHAEOLOGY REVIEW LETTERS HAVE NOT BEEN COMPLETED.
14. OPERATOR TO MARK-UP THIS TABLE AND PLAN WITH APPLICABLE DATES AND ACTIVITIES (I.E., DATE A SILT FENCE IS MOVED)

4.0 INSPECTION & REPORTING

1. QUALIFIED PERSONNEL SHALL INSPECT DISTURBED AREAS OF THE CONSTRUCTION SITE THAT HAVE NOT BEEN FINALLY STABILIZED, AREAS USED FOR STORAGE OF MATERIALS THAT ARE EXPOSED TO PRECIPITATION, STRUCTURAL CONTROL MEASURES, AND LOCATIONS WHERE VEHICLES ENTER AND EXIT THE SITE. INSPECTIONS SHALL BE PERFORMED AT LEAST ONCE EVERY 14 CALENDAR DAYS, BEFORE ANTICIPATED STORM EVENTS, AND WITHIN 24 HOURS OF A STORM EVENT OF 0.5 INCHES OR GREATER.
2. A REPORT SUMMARIZING THE SCOPE OF EACH INSPECTION AND ACTION REQUIRED AND/OR TAKEN MUST BE FILLED OUT AND SIGNED.
3. INSPECTION REPORTS TO BE KEPT WITH THE SWPP (ON-SITE)
4. ALL INSPECTIONS AND REPORTING TO BE PERFORMED IN ACCORDANCE WITH ALR100000.

5.0 SITE OPERATOR CERTIFICATION

1. SITE OPERATOR HEREBY CERTIFIES THAT ALL SWPP ISSUES AND REQUIREMENTS AS SET FORTH IN GENERAL PERMIT ALR100000 HAVE BEEN MET.

SITE OPERATOR CERTIFICATION:

SIGNATURE DATE

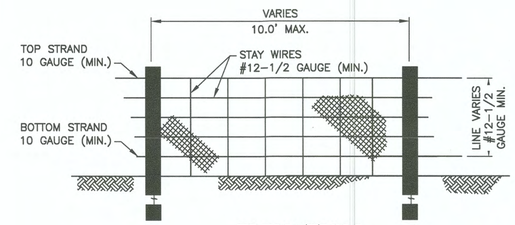

ELEVATION

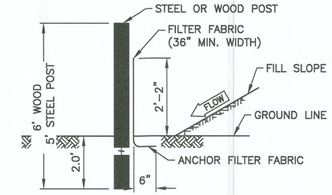

SECTION

NOTES:

1. SILT FENCING SHALL BE IN ACCORDANCE WITH SECTION 665 OF THE ALDOT STANDARD SPECIFICATIONS.
2. FILTER FABRIC SHALL BE A MINIMUM OF 36" IN WIDTH AND SHALL BE FASTENED SECURELY TO THE POSTS.
3. STEEL "T" POSTS SHALL BE 5'-0" IN HEIGHT AND BE OF SELF FASTENER ANGLE STEEL TYPE.
4. WOODEN POSTS SHALL BE A MINIMUM OF 6'-0" IN HEIGHT AND 4" OR MORE IN DIAMETER.
5. FILTER FABRIC SHALL BE FASTENED TO WOODEN POST WITH NOT LESS THAN #9 WIRE STAPLES @ 1" LONG.
6. CONTRACTOR SHALL PERIODICALLY REMOVE ACCUMULATED SEDIMENT, WHEN SEDIMENT DEPTH REACHES 12".
7. THE FILTER FABRIC SHALL MEET THE FOLLOWING REQUIREMENTS:
   7.a. EOS IS NOT LARGER THAN U.S. STANDARD SIEVE NO. 70
   7.b. GRAB STRENGTH 80-120 LB.
   7.c. CONFORM TO ASTM D-1682 OR ASTM D-177

ALABAMA LICENSED No. 37969 PROFESSIONAL ENGINEER LEONARD AUTREY SMITH
5/2/24

6 TEMPORARY SILT FENCING
SCALE: N.T.S.

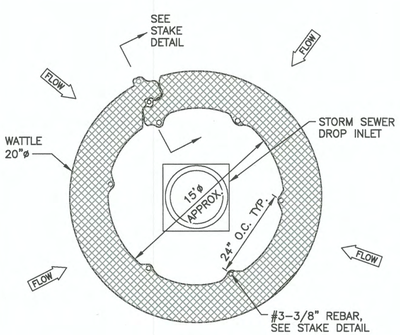

PLAN

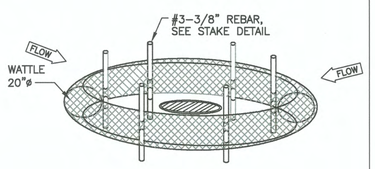

ISOMETRIC

05 DROP INLET PROTECTION
SCALE: N.T.S.

REVISIONS			
#	DESCRIPTION	DATE	BY
1			
2			
3			
4			
5			
6			

EROSION CONTROL DETAILS
CWSRF/ARPA SEWER SYSTEM IMPROVEMENTS
TOWN OF LEXINGTON
LAUDERDALE COUNTY
ALABAMA

THE KELLEY GROUP
A CIVIL ENGINEERING COMPANY
850 Corporate Pwky, Suite 104
Birmingham, Alabama 35242
301 N Dickson St.
Tuscumbia, AL 35674

ATTENTION:
THIS BAR = 1 INCH ON ORIGINAL DRAWING. ADJUST SCALE IF THIS BAR ≠ 1 INCH.

PROJECT NO: 220032
DRAWN BY: EAS
CHECKED BY: BWT
SCALE: AS NOTED
DATE: 05/2024

SHEET NO.
13

R:\2022\220032- LEXINGTON CWSRF 2022\7.0 CAD\PRODUCTION PLAN\DETAILS.DWG