8/9/2023 2:46:24 PM

PLANS

OF THE

SEWER SYSTEM IMPROVEMENTS

FOR THE

TOWN OF WEDOWEE

RANDOLPH COUNTY, ALABAMA

CWSRF PROJECT No. CS010883-02 & CS010883-04

ARC PROJECT No. AL-20358-2021

KG PROJECT NUMBER 20-0016

AUGUST 2023

SHEET INDEX

SHEET No.	DESCRIPTION
C1	TITLE SHEET
C2	GENERAL NOTES
C3	LEGEND SHEET
C4	VICINITY MAP
C5	EXIST. LAGOON OVERALL PLAN
C6	BATHYMETRIC SLUDGE SURVEY
C7	LAGOON EQUIPMENT DEMOLITION
C8	OUTLET STRUCTURE DEMOLITION
C9	LAGOON OVERALL PLAN PROPOSED
C10	WATER LINE PLAN PROPOSED
C11	OUTLET STRUCTURE IMPROVEMENTS
C12	INFLUENT PUMP STATION DETAILS
C13-C19	STANDARD DETAILS
E1	ELECTRICAL LEGEND AND NOTES
E2	TYPICAL SINGLE LINE DIAGRAM
E3	ELECTRICAL SCHEDULES
E10	ELECTRICAL DEMOLITION PLAN
E11	OVERALL SITE ELECTRICAL PLAN
E12	INFLUENT P.S. LARGE SCALE ELECTRICAL PLAN
E13	TYPICAL FLOATING AERATOR ELEC. PLAN
E14	FLOATING NITR. ROTORS ELEC. PLAN
E15	EFFLUENT PUMP STATION ELECTRICAL PLANS
E20	INFLUENT PUMP STATION ELECTRICAL PLANS
E21	STRAINER ELECTRICAL PLANS
E22	FILTER ASSEMBLY ELECTRICAL PLAN
E23	UV SYSTEM ELECTRICAL PLAN
E30-E33	ELECTRICAL DETAILS

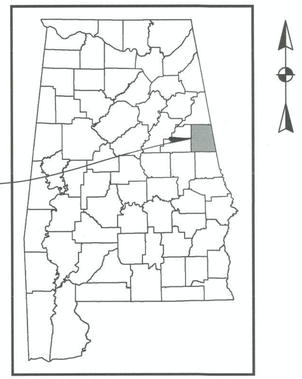

LOCATION MAP

N.T.S.

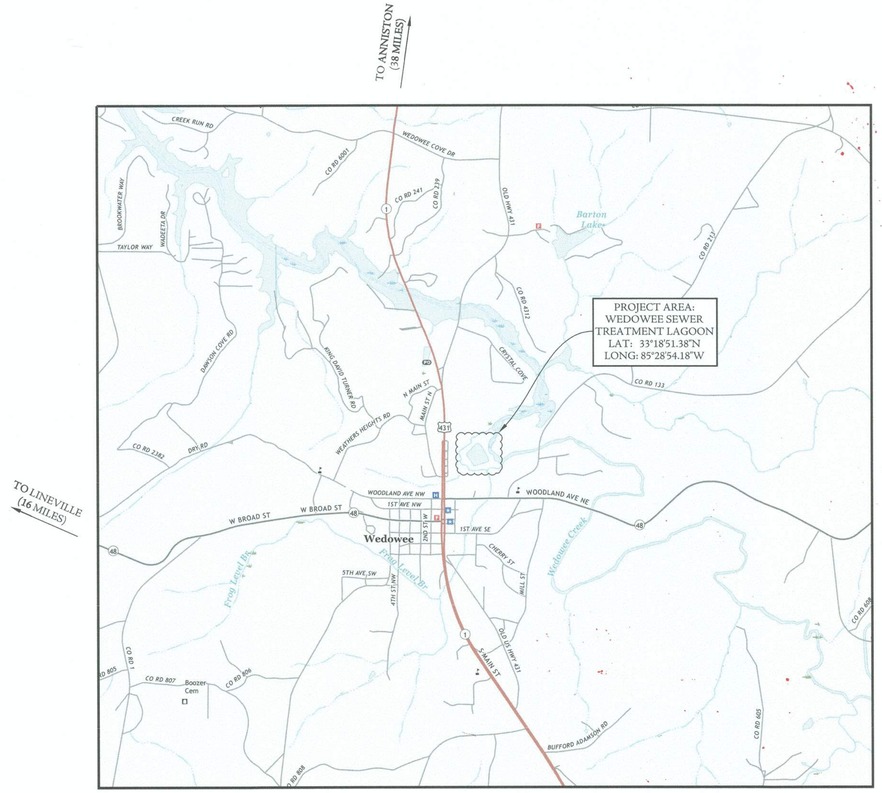

VICINITY MAP

SCALE: 1" = 2000'

0 2000' 4000'

PREPARED BY:

THE KELLEY GROUP

▪ A CIVIL ENGINEERING COMPANY ▪

850 Corporate Pwky, Suite 104 Birmingham, AL 35242

301 N Dickson St, Tuscumbia, AL 35674

REVISIONS

#	DESCRIPTION	DATE	BY
1			
2			
3			
4			
5			
6			

TITLE SHEET

WEDOWEE SEWER SYSTEM IMPROVEMENTS
WEDOWEE WATER, SEWER, & GAS BOARD
TOWN OF WEDOWEE
RANDOLPH COUNTY, ALABAMA

THE KELLEY GROUP
▪ A CIVIL ENGINEERING COMPANY ▪
850 Corporate Pwky, Suite 104 Birmingham, Alabama 35242
301 N Dickson St, Tuscumbia, AL 35674

ATTENTION:
THIS BAR = 1 INCH ON ORIGINAL DRAWING. ADJUST SCALE IF THIS BAR ≠ 1 INCH.

1"

PROJECT NO: 20-0016
DRAWN BY: TCW
CHECKED BY: BWT
SCALE: AS NOTED
DATE: 08/2023

ALABAMA LICENSED No. 24110 PROFESSIONAL ENGINEER BARTLEY W. TATE
8-9-2023

SHEET NO.
C1

R:\2020\200016 - WEDOWEE CWSRF #2\7.0 CAD\PRODUCTION PLAN\200016-T101.DWG

8/9/2023 2:17:17 PM

GENERAL NOTES:

1. ALL MATERIALS, WORKMANSHIP AND CONSTRICTION METHODS TO BE IN ACCORDANCE WITH THE FOLLOWING:

   A) KELLEY GROUP, LLC SPECIFICATIONS
   B) MANUFACTURER'S SPECIFICATIONS
   C) STATE OF ALABAMA DEPARTMENT OF TRANSPORTATION STANDARD SPECIFICATIONS OF HIGHWAY CONSTRUCTION, LATEST EDITION.

2. ALL CONTRACTORS AND THEIR SUBCONTRACTORS ARE RESPONSIBLE FOR REVIEWING EXISTING SITE CONDITIONS AND HAVING ALL QUESTIONS ANSWERED PRIOR TO SUBMITTING BIDS AND BEGINNING CONSTRUCTION. A PRE-BID MEETING WILL BE HELD AND THE LOCATION/TIME IS LISTED IN THE SPECIFICATIONS.

3. ALL EXISTING UTILITIES SHOWN ON THESE DRAWINGS ARE APPROXIMATE AND OTHER UTILITIES MAY EXIST. CONTRACTOR MUST HAVE EXISTING UTILITIES LOCATED BY UNDERGROUND LINE LOCATORS AS WELL AS FIELD VERIFIED BY ONSITE PERSONNEL PRIOR TO ORDERING MATERIALS OR BEGINNING CONSTRUCTION. ANY DISCREPANCIES SHALL BE REPORTED TO THE KELLEY GROUP, LLC.

4. THE CONTRACTOR SHALL TAKE ALL NECESSARY MEASURES TO PROTECT ADJACENT PROPERTIES AND IS RESPONSIBLE FOR ANY DAMAGE TO EXISTING IMPROVEMENTS ON OR OFF SITE DUE TO THE CONSTRUCTION OF THIS PROJECT. ANY DAMAGE WILL BE REPAIRED AT THE CONTRACTOR'S EXPENSE.

5. CONTRACTOR SHALL VERIFY SITE BOUNDARY AND EXISTING TOPOGRAPHY. NOTIFY THE KELLEY GROUP, LLC. OF ANY DISCREPANCIES PRIOR TO SUBMITTING PRICES OR ORDERING MATERIALS.

6. IT IS THE RESPONSIBILITY OF THE CONTRACTOR TO OBTAIN ALL NECESSARY PERMITS REQUIRED TO CONSTRUCT THIS PROJECT AND PAY ALL PERMIT FEES. ALL PERMITS MUST BE IN-HAND PRIOR TO CONSTRUCTION.

7. IT IS THE CONTRACTOR'S RESPONSIBILITY TO PROTECT ALL BENCHMARKS AND PROPERTY CORNERS. ANY REPLACEMENT WILL BE AT THE CONTRACTOR'S EXPENSE.

8. CONTRACTOR IS RESPONSIBLE FOR OFFSETTING/MOVING THE SUPPLIED CONTROL DATA FOR PERFORMANCE OF THE NECESSARY WORK. ANY DEVIATION FROM THE SUPPLIED POINTS AND THE PLANS SHOULD IMMEDIATELY BE BROUGHT TO THE ATTENTION OF THE ENGINEER PRIOR TO THE CONTINUATION OF THE WORK.

9. THE SITE WILL BE AVAILABLE TO ANY CONTRACTOR BEFORE THE OFFICIAL BID OPENING.

10. CONTRACTOR IS RESPONSIBLE FOR WORKPLACE SAFETY AND SHALL SECURE THE PROJECT AREA DURING ALL TIMES WORK IS NOT BEING PERFORMED.

EROSION CONTROL NOTES:

1. SITE EROSION CONTROL MEASURES SHALL BE IN ACCORDANCE WITH ALL FEDERAL, STATE, AND LOCAL LAWS, CODES, AND REGULATIONS.

2. ALL EROSION CONTROL DEVICES SHALL BE PROPERLY MAINTAINED DURING THE CONSTRUCTION PROCESS AND UNTIL ALL DISTURBED AREAS HAVE BEEN PERMANENTLY STABILIZED. ALL EROSION CONTROL INSTALLATION AND MAINTENANCE SHALL BE SOLELY THE RESPONSIBILITY OF THE CONTRACTOR AND SHALL BE AT NO ADDITIONAL COST TO THE OWNER.

3. EROSION CONTROL DEVICES SHOWN ON THESE PLANS ARE A MINIMUM. ADDITIONAL DEVICES SHALL BE INSTALLED AS REQUIRED TO PREVENT SILTATION, EROSION, AND OTHER DEGRADATION OR POLLUTION TO SITE OR ADJACENT PROPERTIES, STREAMS, DITCHES, AND PUBLIC ROADWAYS.

4. EROSION CONTROL DEVICES SHALL INCLUDE THE FOLLOWING DEVICES: SILT FENCING, BRUSH BERMS, SEDIMENT BASINS, DETENTION PONDS, STRAW WATTLES, CHECK DAMS, FILTER BERMS, JUTE MATTING, VEGETATIVE FILTER STRIPS, TURN REINFORCEMENT MAT, DIVERSION BERMS, ETC.

5. THE CONTRACTOR SHALL BE RESPONSIBLE FOR MAINTAINING ALL EROSION CONTROL DEVICES IN GOOD OPERATING CONDITION DURING ALL LAND DISTURBING ACTIVITIES. THIS RESPONSIBILITY SHALL INCLUDE THE CLEANUP AND/OR REPAIRS TO THE DEVICES AT NO ADDITIONAL COST TO THE OWNER.

6. EROSION CONTROL DEVICES SHALL BE MONITORED AND MAINTAINED UNTIL THE SITE HAS BEEN PERMANENTLY STABILIZED AND AFTER EACH RAINFALL GREATER THAN 0.75 INCHES IN A 24 HOUR PERIOD, ANY WIND GUSTS GREATER THAN 25 MPH, AND ANY SUSTAINED WINGS GREATER THAN 20 MPH IN A 24 HOUR PERIOD.

7. AFTER ALL LAND DISTURBANCE ACTIVITIES HAVE CEASED AND AFTER ALL DISTURBED AREAS HAVE BEEN PERMANENTLY STABILIZED, THE EROSION CONTROL DEVICES SHALL BE REMOVED BY THE CONTRACTOR AND THE AREA CLEANED AND DRESSED.

8. A GRAVELED ACCESS DRIVE OF SUFFICIENT SIZE SHALL BE AT EACH SITE ENTRANCE/EXIT TO PREVENT TRACKING OF DIRT AND SEDIMENT ONTO PUBLIC OR PRIVATE ROADWAYS. IF SEDIMENT REACHES THE ROADWAY, THEN IT MUST BE CLEANED AT THE END OF EACH WORKDAY.

9. ALL LAND DISTURBANCE ACTIVITIES SHALL BE CONDUCTED IN A LOGICAL SEQUENCE TO MINIMIZE THE EXPOSURE OF BARE AREAS AT ANY ONE TIME.

10. ALL DISTURBED AREAS LEFT INACTIVE FOR MORE THAN 14 DAYS SHALL BE SEEEDED AND MULCHED IN ACCORDANCE WITH ALDOT SPECIFICATION SECTION 652 AND 656.

11. PRIOR TO SITE CLEARING, ALL PERIMETER SILT FENCING, BRUSH BERMS, ETC. AND GRAVELED ACCESS DRIVES SHALL BE INSTALLED.

12. ALL EXISTING STREAMS, DITCHES, ETC. SHALL BE PROTECTED FROM SEDIMENTS AND SILTS BY SILT FENCING, WATTLES, BRUSH BERMS, ETC.

16. ALL EROSION CONTROL MEASURES SHALL MEET THE REQUIREMENTS OF SECTIONS 665 OF THE ALDOT SPECIFICATIONS. PLANS SHOW DETAILS FOR EROSION CONTROL MEASURES. THE ENGINEER RESERVES THE RIGHT TO ALTER AND CHANGE THE EROSION CONTROL PLANS DUE TO WEATHER AND/OR UNFORESEEN NEED FOR EROSION CONTROL. CONTRACTOR IS EXPECTED TO BE PROACTIVE IN INSURING PROPER EROSION CONTROL. CONTRACTOR SHALL BE REQUIRED TO PROVIDE AN APPROVED RAIN GAUGE TO BE LOCATED ON SITE AND RAIN READINGS RECORDED.

GRADING NOTES:

1. ALL DEMOLITION AND CONSTRUCTION DEBRIS SHALL BE TRANSPORTED AND DISPOSED OF AT LEAST WEEKLY IN AN APPROVED MANNER, AND COMPLETED IN ACCORDANCE WITH SECTION 210 OF THE ALDOT SPECIFICATIONS.

2. GRADES SHOWN ON PLANS REPRESENT FINISHED GRADES AND ELEVATIONS.

3. CLEARING LIMITS SHALL BE 5' OUTSIDE OF ALL PROPOSED GRADED AREAS OR NOT BEYOND THE PROPERTY LINES WHICHEVER IS LESS.

4. NO GRADING OFF-SITE OR IN ROAD RIGHT-OF-WAY WITHOUT PROPER APPROVALS AND PRIOR NOTIFICATION.

5. COORDINATE THE SEQUENCING OF ALL GRADING OPERATIONS WITH THE EROSION CONTROL PLAN.

6. PROPOSED GRADES INDICATED ON THIS PLAN ARE TO FINISH GRADE. THE CONTRACTOR SHALL MAKE SUBGRADE ADJUSTMENTS FOR TOPSOIL, PAVING, BUILDING PAD, ETC.

7. ALL NEW GRADING MUST SMOOTHLY TRANSITION INTO EXISTING GRADES AT THE CULMINATION OF THE NEW GRADES SLOPE.

UTILITY NOTES:

1. ALL CONNECTIONS AND SYSTEM OPERATIONS SHALL TAKE PLACE IN THE PRESENCE OF THE OWNER AND ENGINEER. THE CONTRACTOR SHALL GIVE 24HRS NOTICE TO THE OWNER AND ENGINEER BEFORE COMMENCING THESE ACTIVITIES.

2. IT SHALL BE THE RESPONSIBILITY OF THE CONTRACTOR TO CONTACT THE VARIOUS UTILITY OWNER'S AND DETERMINE THE EXACT LOCATION OF ALL EXISTING UTILTIES WHETHER SHOWN ON THE PLANS OR NOT.

3. CONTRACTOR TO MAKE UTILITY LINE LOCATE REQUEST IN INCREMENTS NOT TO EXCEED 2,000 LINEAR FEET PER WORKING DAY.

4. UTILITY TRENCHES SHALL BE BACKFILLED WITH COMPACTED FILL PLACED IN 6 INCH LOOSE LIFTS. FILL SHALL BE COMPACTED TO 98% STANDARD PROCTOR AND OPTIMUM MOISTURE CONTENT WITHIN ±2.0%.

5. WHEN INSTALLING UTILITIES IN EXISTING PAVED AREAS OR IN AREAS WHERE SOILS ARE CONSIDERED UNSUITABLE FOR BEDDING OR BACKFILLING, UTILITY TRENCHES SHALL BE BACKFILLED FULL DEPTH WITH CRUSHED AGGREGATE.

6. CONTRACTOR TO NOTIFY FIRE DEPARTMENT, POLICE, AND RESCUE SERVICES OF ANY WORK WORK REQUIRING OPEN CUT OF ROADWAYS.

7. SERVICE CONNECTIONS SHALL BE COORDINATED WITH THE OWNER FOR PLACEMENT OF METER BOXES WHEN PLACEMENT OF NEW OR RELOCATION OF EXISTING METER BOXES OCCURS.

8. ALL WATER MAINS, FIRE HYDRANTS, AND WATER SERVICE CONNECTIONS SHALL HAVE A MINIMUM COVER OF 3'-6", AND A MAXIMUM OF 5'-0".

9. MAXIMUM PIPE DEFLECTION SHALL BE ½ OF THE MANUFACTURERS MAXIMUM ALLOWABLE DEFLECTION OR 2.5', WHICHEVER IS LESS.

10. NEW PIPE THAT IS LEFT UNATTENDED DURING CONSTRUCTION SHALL HAVE TEMPORARY PLUGS INSTALLED AT ALL OPENINGS.

11. VALVES SHALL BE INSTALLED AT A DISTANCE OF 5'-0" FROM TEES AND CROSSES.

12. EACH VALVE SHALL INCLUDE A VALVE BOX UNLESS OTHERWISE NOTED ON THE PLANS. ALL WATER VALVE BOX LIDS SHALL BE CAST DUCTILE IRON AND LABELED WITH THE WORDS "WATER"

13. ALL CONNECTIONS TO EXISTING WATER MAIN VALVES, FITTINGS OR OTHER APPURTENANCES AND ALL BENDS, TEES, PLUGS, DEAD-ENDS, WET TAPS, FIRE HYDRANTS, AND BLOW OFF ASSEMBLIES SHALL BE CONSTRUCTED WITH CONCRETE KICKERS AND SHALL ALSO BE INSTALLED WITH RESTRAINING GLANDS. ADDITIONALLY ALL VALVES SHALL BE INSTALLED WITH RESTRAINING GLANDS.

14. THE CONTRACTOR IS RESPONSIBLE FOR COLLECTING AND SENDING THE SAMPLING BACTERIAL WATER SAMPLE TO THE APPROPRIATE LAB FOR TESTING, COORDINATE WITH THE OWNER.

15. ALL NEW WATER LINES ARE TO BE ISOLATED, TESTED, AND APPROVED BY THE ENGINEER PRIOR TO OPENING THE NEW LINE TO THE EXISTING WATER SYSTEM.

16. WATER LINE TRENCHES SHALL BE SLOPED OR BRACED AND SHEETED AS NECESSARY FOR THE SAFETY OF THE WORKERS AND THE PROTECTION OF OTHER UTILITIES, IN COMPLIANCE WITH ALL STATE AND FEDERAL REGULATIONS.

17. 12 GAUGE TRACER WIRE SHALL BE USED ON ALL PVC PIPE AND WARNING TAPE SHALL BE PLACED 1' ABOVE ALL PIPE.

18. THE MINIMUM DISTANCE BETWEEN TEES, CROSSES, VALVES, AND BENDS SHALL BE 5'-0".

19. THE CONTRACTOR SHALL NOTIFY ALL PROPERTY OWNERS ALONG THE ROUTE OF THE WATER LINE AT LEAST 48 HOURS PRIOR TO THE START OF THE CONSTRUCTION.

20. ALL WATER LINE TRENCHES BENEATH PROPOSED OR EXISTING PAVEMENT SHALL BE COMPACTED IN LIFTS.

21. A MINIMUM DISTANCE OF 18" SHALL BE MAINTAINED WHEN CROSSING THE PATH OF STORM SEWER PIPING.

22. THE CONTRACTOR SHALL LOCATE ON THE GROUND WITH PAINT OR EASILY VISIBLE MEANS ALL UNDERGROUND UTILITIES PRIOR TO ANY CONSTRUCTION. CONFLICTS OR DISCREPANCIES SHALL BE BROUGHT TO THE ATTENTION OF THE ENGINEER IMMEDIATELY. THE UTILITIES SHOWN ARE ILLUSTRATED AS LOCATED ON THE GROUND BY LINE LOCATORS, SURVEY OF ABOVE GROUND STRUCTURES, AND ACCORDING TO UTILITY MAPS, AND ARE PROVIDED AS INFORMATION ONLY.

23. THE CONTRACTOR SHALL COORDINATE WITH THE UTILITY COMPANIES CONCERNING CONFLICTS, RELOCATION, REMOVAL, AND INTERRUPTIONS OF SERVICE.

24. THE WORK REQUIRED TO RELOCATE, REMOVE, INSTALL, REPLACE, ETC. UTILITIES SHALL BE THE RESPONSIBILITY OF THE CONTRACTOR, WITHIN THE LIMITS OF THE WORK.

25. THE CONTRACTOR SHALL PRESERVE AND PROTECT ACCORDING TO THE INSTRUCTION OF THE UTILITY INVOLVED ANY "LIVE" UTILITIES LOCATED BY THE UTILITY COMPANY OR CONTRACTOR.

26. THE CONTRACTOR SHALL BE RESPONSIBLE FOR THE REPLACEMENT OF ALL CONCRETE, SIDEWALKS, WALLS, ETC. DAMAGED DURING CONSTRUCTION. ALL DISTURBED AREAS WITHIN PUBLIC RIGHT-OF-WAY SHALL BE RESTORED TO THE ORIGINAL CONDITION OR AS ACCEPTED BY THE OWNER. UNSTABLE OR PUMPING SUBGRADE CONDITIONS MAY OCCUR DURING SITE PREPARATION.

27. THE CONTRACTOR SHALL BE RESPONSIBLE FOR NOTIFYING THE ENGINEER IN ADVANCE OF ALL REQUIRED TESTING AND SECURING COPIES OF RESULTING REPORTS.

28. SIGNS AND MAILBOXES WITHIN THE LIMITS OF CONSTRUCTION SHALL BE REMOVED AND REPLACED AT NO ADDITIONAL COST TO THE PROJECT

TRAFFIC CONTROL NOTES

1. THE TRAFFIC CONTROL PLAN IS DEVELOPED IN CONFORMANCE WITH THE MANUAL ON UNIFORM TRAFFIC CONTROL DEVICES PART 6, 2009 EDITION. THE TRAFFIC CONTROL DEVICES INDICATED REPRESENT CONDITIONS KNOWN DURING PLAN DEVELOPMENT. IN THE EVENT ACTUAL PHYSICAL CONDITIONS WARRANT ADDITIONAL TRAFFIC CONTROL DEVICES, THEY SHALL BE INSTALLED IN CONFORMANCE WITH THE M.U.T.C.D. PART 6 AS DIRECTED BY THE ENGINEER. COST SHALL BE PAID FOR UNDER THE APPROPRIATE PAY ITEM.

2. ALL BLACK ON ORANGE CONSTRUCTION SIGNS SHALL BE FABRICATED USING TYPES IV OR VII FLUORESCENT ORANGE REFLECTIVE SHEETING MATERIAL FOR THE SIGN BACKGROUND.

3. THE CONTRACTOR SHALL PLACE ALL ADVANCE WARNING SIGNS BEFORE PROCEEDING WITH HIS WORK. SIGNS SHALL BE PLACED IN ORDER, IN THE DIRECTION OF TRAFFIC AND REMOVED IN REVERSE ORDER.

4. THE CONTRACTOR SHALL MAINTAIN AT LEAST ONE ACCESS TO BUSINESSES AND RESIDENCES DURING ALL PHASES OF CONSTRUCTION.

5. CONSTRUCTION SIGNS MOUNTED ON TEMPORARY SUPPORTS SHALL BE MOUNTED AT A MINIMUM HEIGHT OF 5 FEET.

6. FLAGGERS ARE TO BE USED WHEN DIRECTED BY THE ENGINEER. SIGNS SHALL BE PLACED AT THE APPROPRIATE TIME, AND SHALL BE COVERED OR REMOVED WHEN FLAGGERS ARE NOT ON DUTY AND DURING NON-WORKING HOURS.

7. ALL CONTRACTOR'S EMPLOYEES' PERSONAL VEHICLES, AND CONTRACTOR'S EQUIPMENT NOT IN OPERATION, SHALL BE PARKED A MINIMUM OF THIRTY (30) FEET FROM THE TRAVELED WAY DURING WORKING HOURS, AS NOT TO CREATE A HAZARD.

8. ALL TRAFFIC CONTROL DEVICES THAT ARE NOT APPLICABLE AT ANY SPECIFIC TIME SHALL BE COVERED OR REMOVED AS DIRECTED BY THE ENGINEER.

9. ALL SIGNS SHALL BE POST-MOUNTED IF THE WORK PERIOD EXCEEDS FOUR DAYS, EXCEPT FOR THOSE SIGNS WHICH ARE MOUNTED ON BARRICADES. FOR REPEATED DAY OPERATIONS, SIGNS MAY E MOUNTED ON TEMPORARY SUPPORTS AND REMOVED AT THE COMPLETION OF THE DAY'S OPERATION.

10. SIGNS ON TEMPORARY SUPPORTS ARE TO BE REMOVED OR COVERED WHEN NO WORK IS BEING PERFORMED OR AT THE COMPLETION OF THE DAY'S OPERATION.

11. CHANNELIZING DEVICES SHALL EXTEND TO A POINT WHERE THEY ARE VISIBLE TO APPROACHING TRAFFIC.

12. THE CONTRACTOR SHALL CLOSE THE LANE ADJACENT TO THE WORK AREA ANYTIME WORK OUTSIDE THE EXISTING TRAVEL LANES ENCROACHES WITHIN 2 FEET OF THE EXISTING EDGE OF PAVEMENT.

13. MOVING OPERATIONS SHALL BE CONFINED TO ONE LANE IN THE DIRECTION OF TRAFFIC.

14. R16-3 AND R16-3a SIGNS SHALL BE REQUIRED FOR EVERY PROJECT ON STATE ROUTES AND INTERSTATE HIGHWAYS. THEY SHALL BE POSTED AT THE BEGINNING AND END OF THE PROJECT. AN R2-1 SIGN SHALL ALWAYS BE REQUIRED FOLLOWING AN R16-3 SIGN. ADDITIONAL R16-3 SIGNS SHALL BE POSTED AT A MAXIMUM THREE MILE INTERVALS THROUGHOUT THE PROJECT LIMITS. ADDITIONAL R16-3 SIGNS SHALL BE REQUIRED WITH A W3-5b SIGN AND R2-1 SIGN WHENEVER A REDUCTION IN SPEED IS REQUIRED.

15. WHEN A CONSTRUCTION WORK ZONE SPEED LIMIT REDUCTION IS REQUIRED, THE CONTRACTOR SHALL COVER OR REMOVE THE R2-1 (REGULATORY SPEED SIGNS) AND THE W3-5b (REDUCED SPEED AHEAD) SIGNS AT THE END OF THE WORK DAY UNLESS OTHERWISE DIRECTED BY THE ENGINEER.

16. CONSTRUCTION SIGNS MOUNTED ON A SINGLE OR DUAL SQUARE TUBULAR OR U-CHANNEL POST SHALL BE INSTALLED AS SHOWN ON SPECIAL DRAWING NOS. IHS-710-21 AND IHS-710-23.

ABBREVIATIONS

ACQ'D	ACQUIRED
AC	ACRE
ALDOT	ALABAMA DEPARTMENT OF TRANSPORTATION
BM	BENCHMARK
BCCMP	BITUMINOUS COATED CORRUGATED METAL PIPE
BLDG	BUILDING
CC	CARRYING CAPACITY
CIP	CAST IRON PIPE
℄	CENTER LINE
CONC	CONCRETE
CU. YD.	CUBIC YARD
C&G	CURB AND GUTTER
DF	DESIGN FLOW
DIST	DISTANCE
DA	DRAINAGE AREA
DI	DUCTILE IRON
DIP	DUCTILE IRON PIPE
E	EASTING
ESMT	EASEMENT
EL	ELEVATION
FL	FLOWLINE
GPM	GALLONS PER MINUTE
GM	GAS METER
GV	GAS VALVE
GFCI	GROUND FAULT CIRCUIT INTERRUPTER
HC	HANDICAP
HDWL	HEADWALL
HW	HIGH WATER
HORIZ	HORIZONTAL
JCT	JUNCTION
JCT BOX	JUNCTION BOX
LF	LINEAR FEET
LP	LOW POINT
MB	MAILBOX
MH	MANHOLE
N	NORTHING
PC	POINT OF CURVATURE
PI	POINT OF INTERSECTION
PT	POINT OF TANGENCY
P̲L̲	PROPERTY LINE
RR	RAILROAD
R	RANGE
RCP	REINFORCED CONCRETE PIPE
REQ'D	REQUIRED
ROW	RIGHT OF WAY
RD	ROAD
SS	SANITARY SEWER
S	SECTION
SQ. YD.	SQUARE YARD
STA	STATION
ST	STREET
TBM	TEMPORARY BENCH MARK
T	TOWNSHIP
VERT	VERTICAL
VPC	VERTICAL POINT OF CURVATURE
VPI	VERTICAL POINT OF INTERSECTION
VPT	VERTICAL POINT OF TANGENCY
WM	WATER METER
WV	WATER VALVE
WP	WATERPROOF
WW	WINGWALL
YD	YARD

ALABAMA LICENSED No. 19114 PROFESSIONAL ENGINEER BARTLEY W. TAFT
8-9-2023

REVISIONS			
#	DESCRIPTION	DATE	BY
1			
2			
3			
4			
5			
6			

GENERAL NOTES
WEDOWEE SEWER SYSTEM IMPROVEMENTS
WEDOWEE WATER, SEWER, & GAS BOARD
TOWN OF WEDOWEE
RANDOLPH COUNTY, ALABAMA

THE KELLEY GROUP
• A CIVIL ENGINEERING COMPANY •
850 Corporate Pwky, Suite 104 Birmingham, Alabama 35242
301 N Dickson St, Tuscumbia, AL 35674

ATTENTION:
THIS BAR = 1 INCH ON ORIGINAL DRAWING. ADJUST SCALE IF THIS BAR ≠ 1 INCH.
1"

PROJECT NO: 20-0016
DRAWN BY: TCW
CHECKED BY: BWT
SCALE: AS NOTED
DATE: 08/2023

SHEET NO.
C2

R:\2020\200016 - WEDOWEE CWSRF #2170 CAD\PRODUCTION PLAN\200016-GN01.DWG

8/9/2023 2:17:21 PM

ABBREVIATIONS

ACQUIRED	AQ'D	LINEAR FEET	L.F.
ACRE	AC.	POINT ON CURVE	P.O.C.
BENCHMARK	B.M.	POINT OF CURVE	P.C.
BITUMINOUS COATED		POINT OF INTERSECTION	P.I.
CORRUGATED METAL PIPE	B.C.C.M.P.	POINT OF TANGENT	P.T.
BRICK RESIDENCE	BR. RES.	POINT ON TANGENT	P.O.T.
BUILDING	BLDG.	PROPERTY LINE	℄
CARRYING CAPACITY	C.C.	RAILROAD	R.R.
CAST IRON PIPE	C.I.P.	RANGE	R.
CENTER LINE	℄	RIGHT OF WAY	R.O.W.
CONCRETE	CONC.	REQUIRED	REQ'D
CORNER	COR.	RENFORCED CONCRETE PIPE	R.C.P.
CUBIC YARD	C.Y.	SANITARY SEWER	SAN. SEW.
CURB AND GUTTER	C&G	SECTION	SEC.
DESIGN FLOW	D.F.	SHOULDER	SHLDR.
DISTANCE	DIST.	SIDE DRAIN	S.D.
DOUBLE	DBL.	SQUARE YARD	S.Y.
DRAINAGE AREA	D.A.	STATION	STA.
DUCTILE IRON	D.I.	STORM SEWER	STM. SEW.
DUCTILE IRON PIPE	D.I.P.	STREET	ST.
EASEMENT	ESMT.	TANGENT TO CURVE	TAN. TO C.
ELEVATION	EL.	TOWNSHIP	T.
FLOW LINE	F.L.	VALLEY GUTTER	V.G.
FRAME RESIDENCE	FR. RES.	VERTICAL	VERT.
GALLONS PER MINUTE	G.P.M.	VERTICAL POINT OF CURVE	V.P.C.
GAS METER	G.M.	VERTICAL POINT OF INTERSECTION	V.P.I.
GAS VALVE	G.V.	VERTICAL POINT OF TANGENT	V.P.T.
HEADWALL	HDWL.	VITRIFIED CLAY PIPE	V.C.P.
HIGH WATER	H.W.	WATER METER	W.M.
HORIZONTAL	HORIZ.	WATER VALVE	W.V.
JUNCTION	JCT.	WING WALL	W.W.
JUNCTION BOX	JCT. BOX	YARD	YD.

MISCELLANEOUS

- 459 — INTERSTATE HIGHWAY
- 280 — UNITED STATES HIGHWAY
- 150 — STATE HIGHWAY
- 115 — COUNTY HIGHWAY

PIPE FITTING SYMBOLS

A	90° ELBOW	O	ECCENTRIC REDUCER
B	90° BASE ELBOW	P	BLIND FLANGE
C	90° LONG RADIUS ELBOW	Q	MECHANICAL JOINT PLUG
D	90° REDUCING ELBOW	R	VICTAULIC COUPLING
E	45° ELBOW	S	MERCER EXPANSION JOINT
F	22.5° ELBOW	T	FLANGED COUPLING ADAPTER W/ THRUST TIES
G	11.25° ELBOW	U	GROOVED END IPS PIPE
H	TEE	V	RETAINER GLANDS
J	CROSS	W	FLARE 90° ELBOW
K	90° SIDE OUTLET ELBOW	X	FLARE CASTINGS
L	SIDE OUTLET TEE	WP	WALL PIPE
M	WYE	FP	FLOOR PIPE
N	CONCENTRIC REDUCER	WS	WALL SLEEVE
		FS	FLOOR SLEEVE

CONTRACTOR NOTE:

THE TYPE, SIZE, LOCATION, AND DEPTH OF ALL PUBLIC UTILITIES MAY OR MAY NOT BE SHOWN FROM AVAILABLE RECORDS.

THE CONTRACTOR IS REQUIRED TO VERIFY LOCATIONS PRIOR TO CONSTRUCTION. LOCATIONS MAY BE ASCERTAINED BY CONTACTING ALABAMA LINE LOCATION CENTER AT 1-800-292-8525.

NATURAL

EXISTING	PROPOSED	DESCRIPTION
		TREE (SIZE & DESCR. NOTED)
		SHRUB
		TREE LINE
		EDGE OF WATER
		EARTH
		ROCK
		DITCH CENTERLINE

STRUCTURES

EXISTING	PROPOSED	DESCRIPTION
		ASPHALT ROAD OR DRIVEWAY
		BUILDING
		BRIDGE OR BOX CULVERT (SIZE & DESCR. NOTED)
		CHAIN LINK FENCE
		CONCRETE ROAD OR DRIVEWAY
		CONCRETE SIDEWALK
		DROP INLET (DESCR. NOTED)
		EDGE OF CURB
		EDGE OF ROAD
FH	FH	FIRE HYDRANT
		GATE
		GRAVEL ROAD OR DRIVEWAY
		GUARDRAIL
X	X	HOG WIRE OR BARBED WIRE FENCE
MB	MB	MAILBOX
		MASONRY WALL (DESCR. NOTED)
		RAILROAD TRACK – SINGLE
		RAILROAD TRACK – DOUBLE
		ROAD ℄
		STORM DRAIN PIPE (SIZE & DESCR. NOTED)
		TRAFFIC OR STREET SIGN
W	W	WATER METER
WV	WV	WATER VALVE
		WOOD FENCE

SURVEY

EXISTING	PROPOSED	DESCRIPTION
XXX.X +	XXX +	SPOT ELEVATION
XXX	XXX	CONTOUR
0 5 10	0 5 10	PIPE CENTERLINE LOCATION
		RIGHT OF WAY
		SERVITUDE OR EASEMENT
		PROPERTY IRON (DESC. NOTED)
℄	℄	PROPERTY LINE
		SECTION CORNER
		SECTION LINE
		¼ – ¼ SECTION LINE
X		TRACT NO. FOR ROW

UTLITIES

EXISTING	PROPOSED	DESCRIPTION
		SANITARY SEWER MANHOLE
SS		SANITARY SEWER GRAVITY LINE (SIZE NOTED IF KNOWN)
		SANITARY SEWER FORCEMAIN (SIZE NOTED IF KNOWN)
T	T	UTILITY MANHOLE (TYPE NOTED IN CIRCLE P,T,ETC...)
W		WATER LINE (SIZE NOTED IF KNOWN)
G	G	GAS LINE (SIZE NOTED IF KNOWN)
		WATER METER
		GAS METER
		GAS LINE MARKER (NOTED)
		VALVE (TYPE NOTED)
		POWER POLE
		GUY WIRE
T	T	OVERHEAD TELEPHONE
OHE	OHE	OVERHEAD ELECTRIC
T	T	UNDERGROUND TELEPHONE
UGE	UGE	UNDERGROUND ELECTRIC
		GROUT HOLES
		FIRE HYDRANT

ALABAMA LICENSED No. 24419 PROFESSIONAL ENGINEER BARTLEY W. TAPP
8-9-2023

REVISIONS

#	DESCRIPTION	DATE	BY
1			
2			
3			
4			
5			
6			

LEGEND SHEET

WEDOWEE SEWER SYSTEM IMPROVEMENTS
WEDOWEE WATER, SEWER, & GAS BOARD
TOWN OF WEDOWEE
RANDOLPH COUNTY, ALABAMA

THE KELLEY GROUP
• A CIVIL ENGINEERING COMPANY •
850 Corporate Pwky, Suite 104 Birmingham, Alabama 35242
301 N Dickson St, Tuscumbia, AL 35674

ATTENTION:
THIS BAR = 1 INCH ON ORIGINAL DRAWING. ADJUST SCALE IF THIS BAR ≠ 1 INCH.

PROJECT NO: 20-0016
DRAWN BY: TCW
CHECKED BY: BWT
SCALE: AS NOTED
DATE: 08/2023

SHEET NO.
C3

R:\2020\200016 - WEDOWEE CWSRF #217.0 CAD\PRODUCTION PLAN\200016-GN02.DWG

8/9/2023 2:17:27 PM



VICINITY MAP

SCALE: 1" = 250'

Scale : 1" = 250'

REVISIONS			
#	DESCRIPTION	DATE	BY
1			
2			
3			
4			
5			
6			

VICINITY MAP

WEDOWEE SEWER SYSTEM IMPROVEMENTS
WEDOWEE WATER, SEWER, & GAS BOARD
TOWN OF WEDOWEE
RANDOLPH COUNTY, ALABAMA

THE KELLEY GROUP
• A CIVIL ENGINEERING COMPANY •
850 Corporate Pwky, Suite 104 Birmingham, Alabama 35242
301 N Dickson St, Tuscumbia, AL 35674

ATTENTION:
THIS BAR = 1 INCH ON ORIGINAL DRAWING. ADJUST SCALE IF THIS BAR ≠ 1 INCH.

1"

ALABAMA LICENSED No. 29114 PROFESSIONAL ENGINEER BARTLEY W. TAYLOR
8-9-2023

PROJECT NO: 20-0016
DRAWN BY: TCW
CHECKED BY: BWT
SCALE: AS NOTED
DATE: 08/2023

SHEET NO.
C4

R:\2020\200016 - WEDOWEE CWSRF #21\0 CAD\BASE PLAN\200016 - VM01.DWG

8/9/2023 2:18:25 PM

CONTRACTOR NOTES:

1. CONTRACTOR TO REMOVE AND DISPOSE EXISTING LAGOON CURTAINS AFTER SLUDGE REMOVAL IS COMPLETE. END ANCHORS FOR EXISTING LAGOON CURTAINS MAY REMAIN.
2. CONTRACTOR TO REMOVE EXISTING POWER LINES TO RECYCLE PUMPS, AND ALL POLES OR OTHER APPURTENANCES NOT NEEDED FOR INSTALLATION OF NEW SURFACE MIXERS.
3. CONTRACTOR TO PROVIDE SLUDGE REMOVAL PLAN FOR ENGINEER'S REVIEW OUTLINING THE EQUIPMENT TO BE USED AND THE PROCEDURE TO BE EMPLOYED TO REMOVE SLUDGE FROM THE LAGOON. A SLUDGE INVESTIGATION HAS BEEN PERFORMED INDICATING THE ASSUMED SLUDGE VOLUME AND MOST EFFICIENT POLYMER FOUND FOR DEWATERING.
4. SLUDGE TO BE PUMPED FROM THE LAGOON BOTTOM, THE SLURRY MIXED WITH AN APPROPRIATE POLYMER, AND PLACED IN DEWATERING BAGS ALLOWING THE EFFLUENT TO FLOW BACK TO THE LAGOON. AFTER PROPER DEWATERING, THE GEOBAGS CONTAINING DEWATERED SLUDGE SHALL BE TRANSPORTED BY THE CONTRACTOR TO A LICENSED LANDFILL FOR DISPOSAL. CONTAMINANTS TESTING HAS BEEN PERFORMED INDICATING THE SLUDGE CAN BE DISPOSED OF AT A LICENSED LANDFILL. RESULTS OF CONTAMINANT TESTING IS INCLUDED IN THE SLUDGE REPORT.
5. CONTRACTOR SHALL BE RESPONSIBLE FOR ALL LABORERS, PUMPS, POLYMER, MAKEUP TANKS, HOSES, POWER, ETC. TO REMOVE SLUDGE WHILE THE PLAN MAINTAINS TREATMENT OPERATIONS.
6. CONTRACTOR IS NOT CONSTRAINED TO THE POLYMER OR DOSAGE LISTED INT HE REPORT AND IS FREE TO PERFORM HIS OWN INVESTIGATION OF SLUDGE VOLUME TO BE EXPECTED, AND POLYMER TO PROVIDE THE MOST EFFICIENT REMOVAL AND DEWATERING OPERATION.
7. PROTECT LAGOON BANK SLOPES AT ALL TIMES PROVIDING RIP-RAP AND EROSION PROTECTION AS NEEDED.

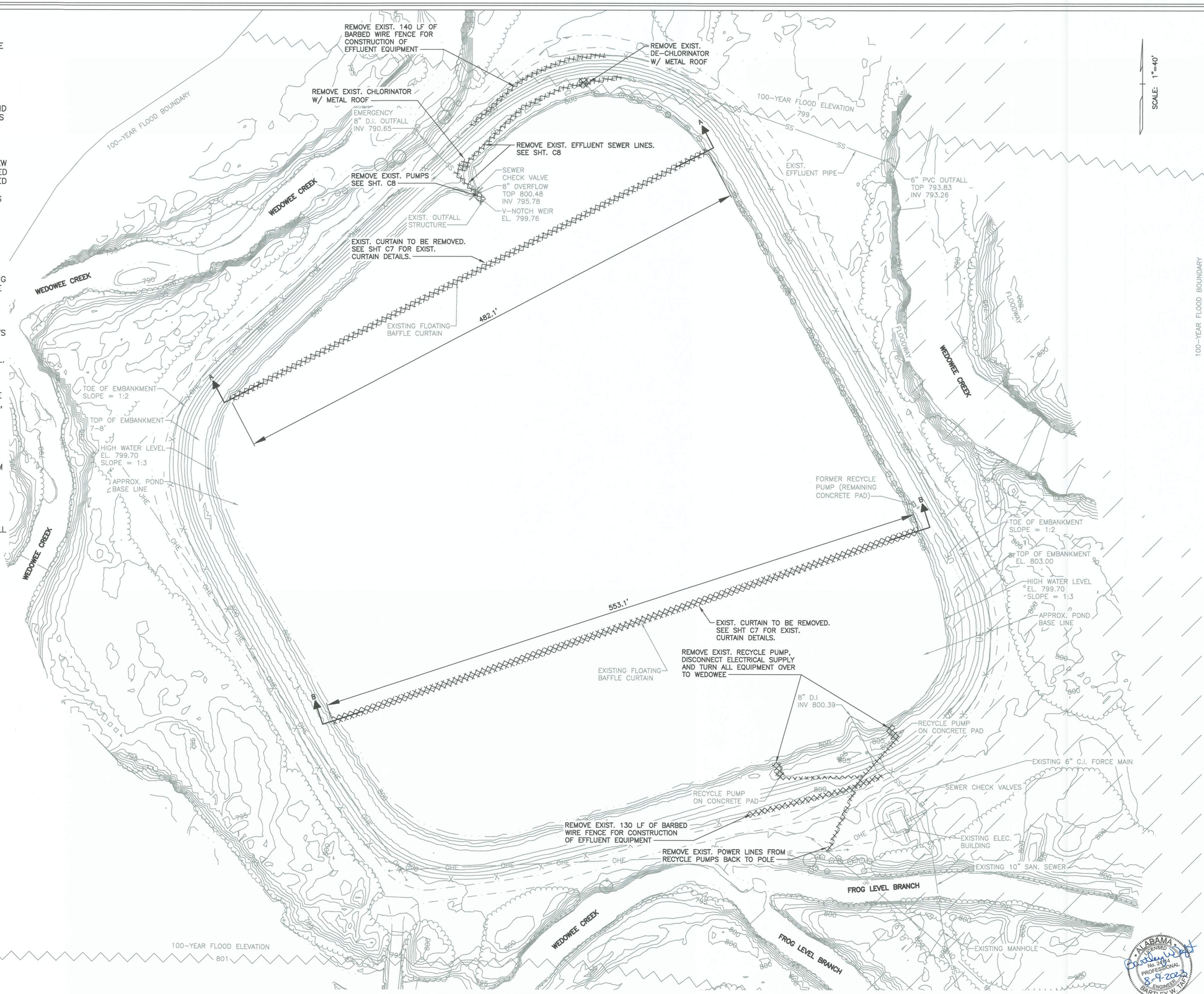

EXIST. LAGOON OVERALL PLAN

SCALE: 1" = 40'

REVISIONS			
#	DESCRIPTION	DATE	BY
1			
2			
3			
4			
5			
6			

EXIST. LAGOON OVERALL PLAN
WEDOWEE SEWER SYSTEM IMPROVEMENTS
WEDOWEE WATER, SEWER, & GAS BOARD
TOWN OF WEDOWEE
RANDOLPH COUNTY, ALABAMA

THE KELLEY GROUP
• A CIVIL ENGINEERING COMPANY •
850 Corporate Pwky, Suite 104 Birmingham, Alabama 35242
301 N Dickson St, Tuscumbia, AL 35674

ATTENTION:
THIS BAR = 1 INCH ON ORIGINAL DRAWING. ADJUST SCALE IF THIS BAR ≠ 1 INCH.

PROJECT NO: 20-0016
DRAWN BY: TCW
CHECKED BY: BWT
SCALE: AS NOTED
DATE: 08/2023

SHEET NO.
C5

ALABAMA LICENSED No. 24914 PROFESSIONAL ENGINEER BARTLEY W. TAYLOR
8-9-2023

R:\2020\200016 - WEDOWEE CWSRF #217.0 CAD\PRODUCTION PLAN\200016 LAGOON PP.DWG

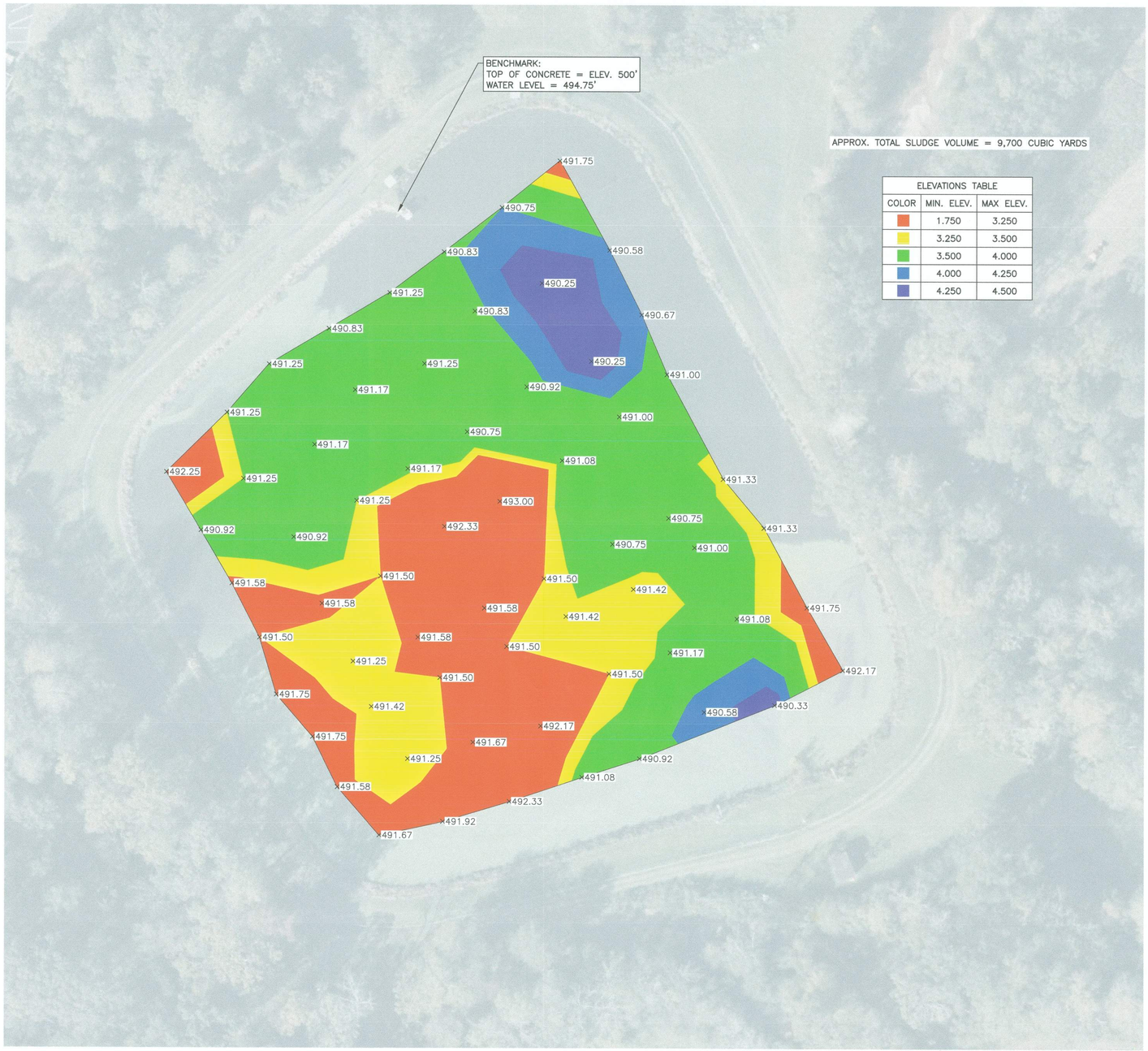

BATHYMETRIC SLUDGE SURVEY PLAN

SCALE: 1" = 50'

REVISIONS

#	DESCRIPTION	DATE	BY
1			
2			
3			
4			
5			
6			

BATHYMETRIC SLUDGE SURVEY

WEDOWEE SEWER SYSTEM IMPROVEMENTS
WEDOWEE WATER, SEWER, & GAS BOARD
TOWN OF WEDOWEE

THE KELLEY GROUP
• A CIVIL ENGINEERING COMPANY •
850 Corporate Pwky, Suite 104 Birmingham, Alabama 35242
301 N Dickson St, Tuscumbia, AL 35674

ATTENTION:
THIS BAR = 1 INCH ON ORIGINAL DRAWING. ADJUST SCALE IF THIS BAR ≠ 1 INCH.

1"

PROJECT NO: 20-0016
DRAWN BY: TCW
CHECKED BY: BWT
SCALE: AS NOTED
DATE: 08/2023

SHEET NO.
C6

ALABAMA LICENSED PROFESSIONAL ENGINEER BARTLEY W. TAYLOR 8-9-2023

8/9/2023 2:18:33 PM

R:\2020\200016 - WEDOWEE CWSRF #2170 CAD\PRODUCTION PLAN\200016-SU01B.DWG

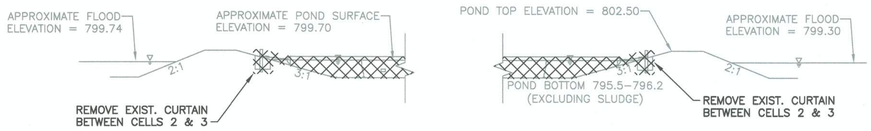

EXISTING LAGOON CURTAIN SECTION B-B

SCALE: 1"=20'

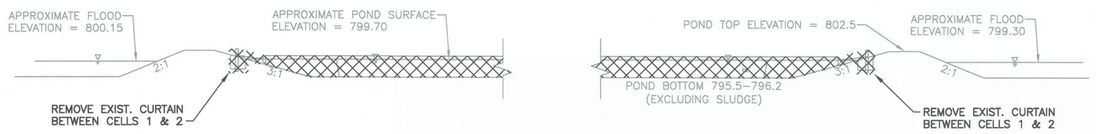

EXISTING LAGOON CURTAIN SECTION A-A

SCALE: 1"=20'

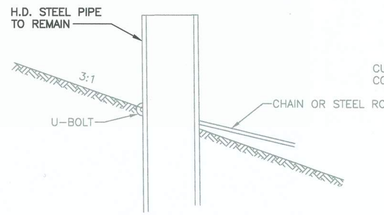

EXISTING ANCHOR POST DETAIL

N.T.S.

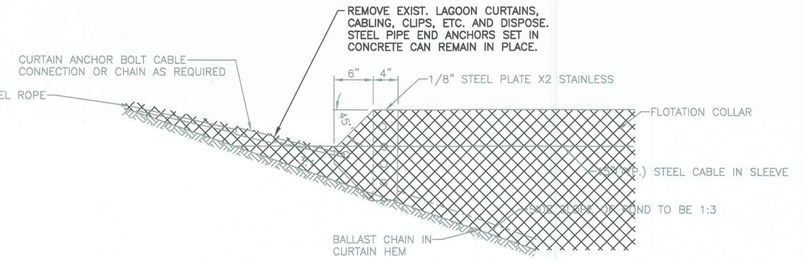

EXISTING CURTAIN ANCHOR DETAIL

1" = 1'

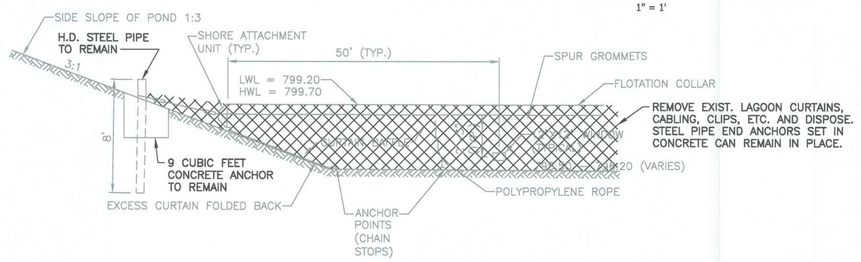

ELEVATION

N.T.S.

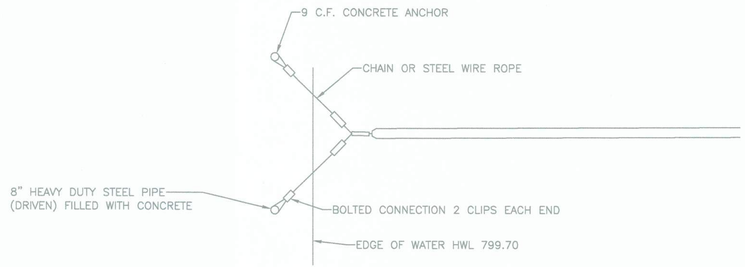

PLAN VIEW

N.T.S.

EXISTING BAFFLE WALL SCHEMATIC

N.T.S.

REVISIONS			
#	DESCRIPTION	DATE	BY
1			
2			
3			
4			
5			
6			

LAGOON EQUIPMENT DEMOLITION
WEDOWEE SEWER SYSTEM IMPROVEMENTS
WEDOWEE WATER, SEWER, & GAS BOARD
TOWN OF WEDOWEE
RANDOLPH COUNTY, ALABAMA

THE KELLEY GROUP
• A CIVIL ENGINEERING COMPANY •
850 Corporate Pwky, Suite 104 Birmingham, Alabama 35242
301 N Dickson St, Tuscumbia, AL 35674

ATTENTION:
THIS BAR = 1 INCH ON ORIGINAL DRAWING.
ADJUST SCALE IF THIS BAR ≠ 1 INCH.

1"

PROJECT NO: 20-0016
DRAWN BY: TCW
CHECKED BY: BWT
SCALE: AS NOTED
DATE: 08/2023

ALABAMA LICENSED No. 26314 PROFESSIONAL ENGINEER BARTLEY W. TAYLOR
8-9-2023

SHEET NO.
C7

8/9/2023 2:19:15 PM

R:\2020\200016 - WEDOWEE CWSRF #217.0 CAD\PRODUCTION PLAN\200016 OUTLET & BAFFLE WALL DETAILS.DWG

8/9/2023 2:19:24 PM

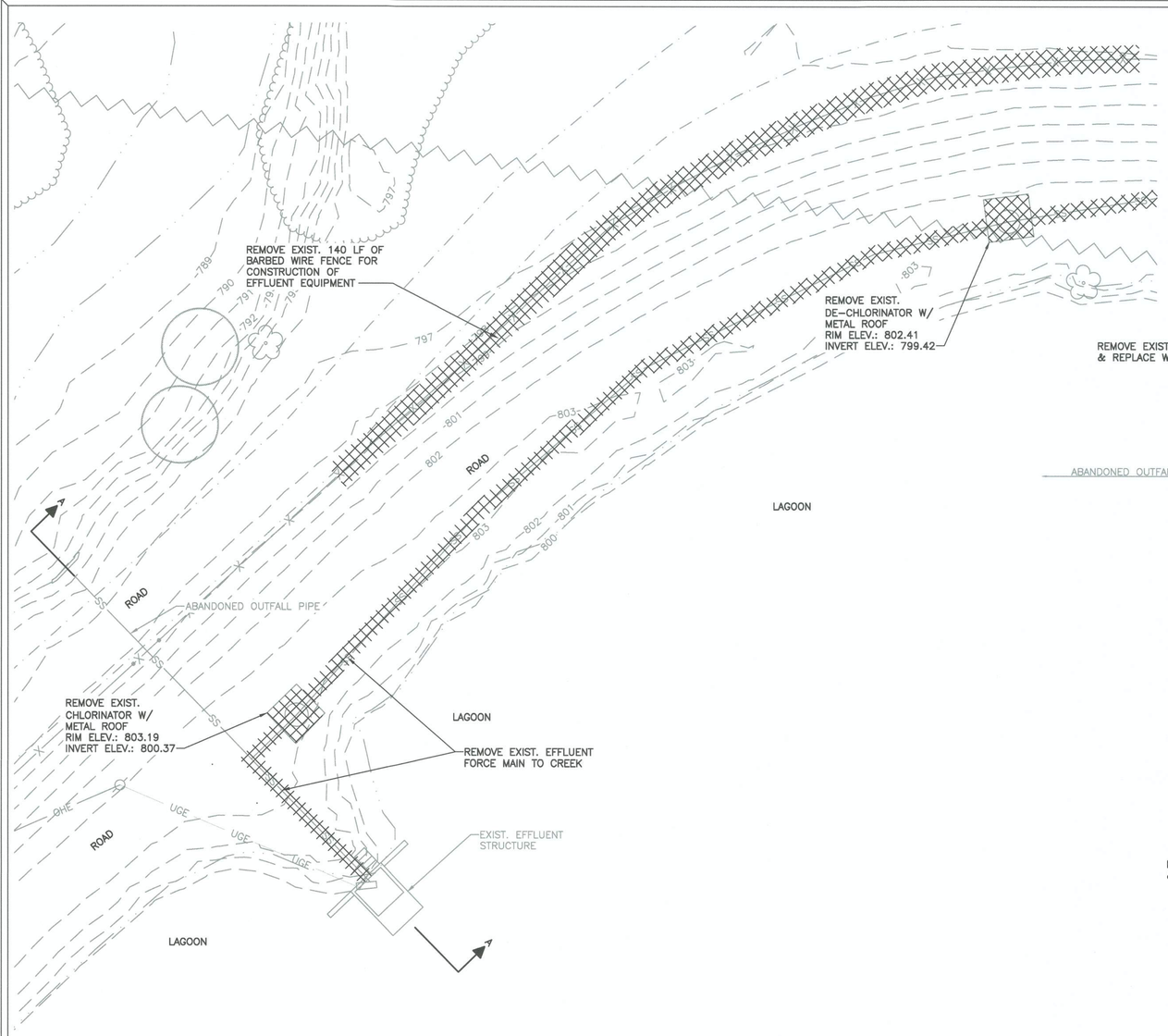

EXIST. OUTFALL PLAN

SCALE: 1" = 10'

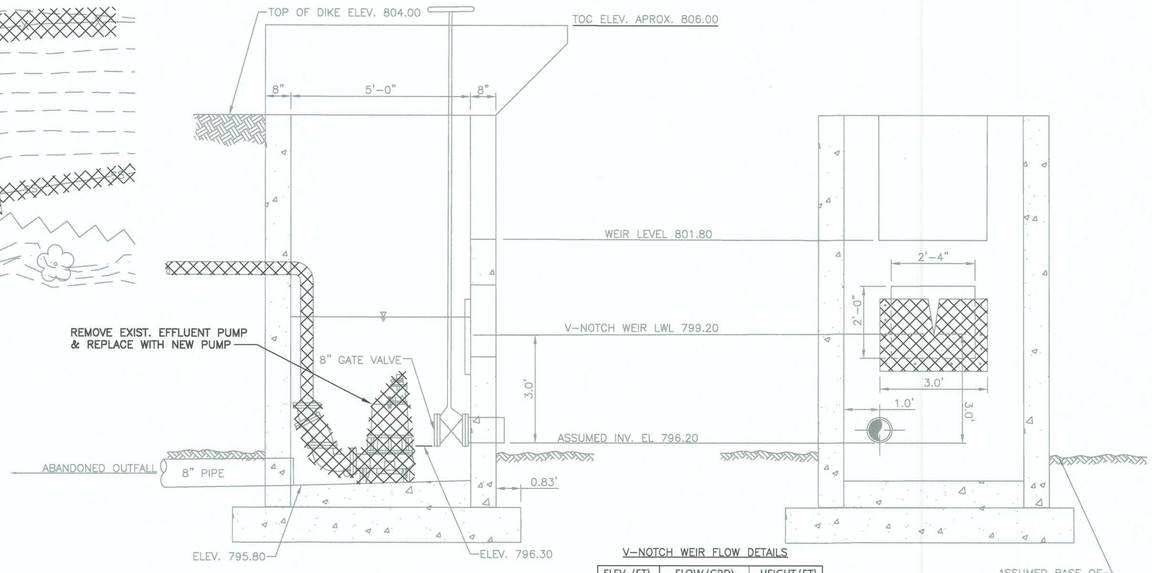

SECTION C-C

SCALE: 1/2" = 1'

SECTION B-B

SCALE: 1/2" = 1'

V-NOTCH WEIR FLOW DETAILS

ELEV. (FT)	FLOW (GPD)	HEIGHT (FT)
799.20	0	0.00
799.30	0	0.10
799.40	6463	0.20
799.50	12926	0.30
799.60	25853	0.40
799.70	45242	0.50
799.80	71095	0.60
799.90	103411	0.70
799.94	120000	0.74
800.00	142190	0.80
800.10	187430	0.90
800.20	245600	1.00

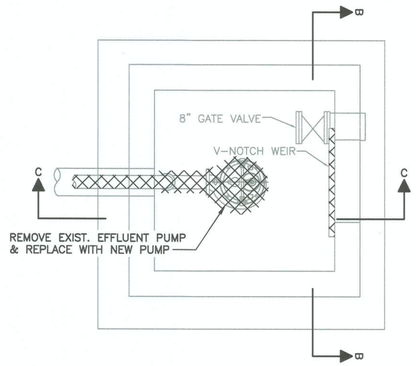

EFFLUENT STRUCTURE PLAN VIEW

SCALE: 1/2" = 1'

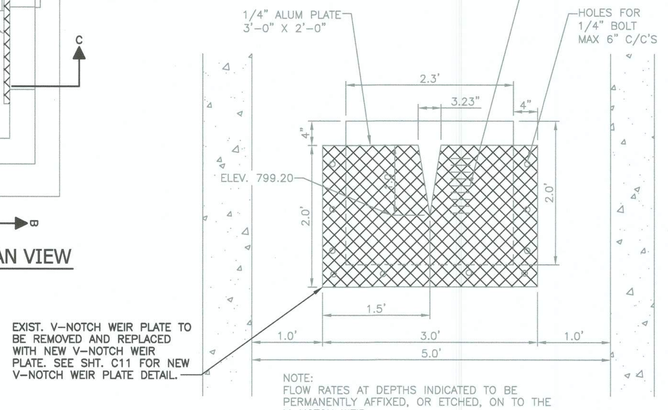

DETAIL OF V-NOTCH WEIR (17.02°)

SCALE: 1"=1'

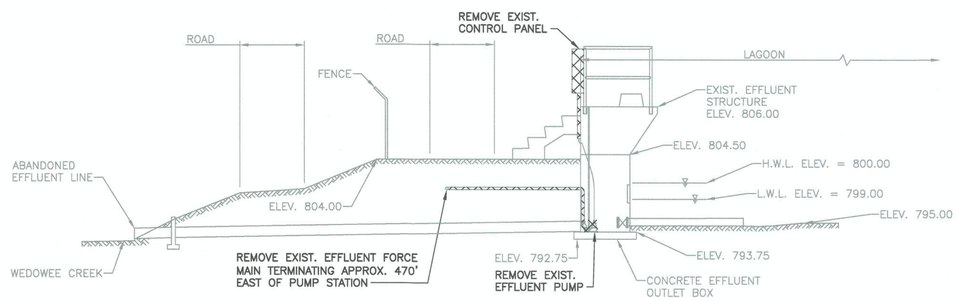

EXIST. OUTFALL SECTION A-A

SCALE: N.T.S.

REVISIONS			
#	DESCRIPTION	DATE	BY
1			
2			
3			
4			
5			
6			

OUTLET STRUCTURE DEMOLITION
WEDOWEE SEWER SYSTEM IMPROVEMENTS
WEDOWEE WATER, SEWER, & GAS BOARD
TOWN OF WEDOWEE
RANDOLPH COUNTY, ALABAMA

THE KELLEY GROUP
• A CIVIL ENGINEERING COMPANY •
850 Corporate Pwky, Suite 104 Birmingham, Alabama 35242
301 N Dickson St, Tuscumbia, AL 35674

ATTENTION:
THIS BAR = 1 INCH ON ORIGINAL DRAWING. ADJUST SCALE IF THIS BAR ≠ 1 INCH.

1"

PROJECT NO: 20-0016
DRAWN BY: TCW
CHECKED BY: BWT
SCALE: AS NOTED
DATE: 08/2023

ALABAMA LICENSED No. 30114 PROFESSIONAL ENGINEER BARTLEY W. TAYLOR
8-9-2023

SHEET NO.
C8

R:\2020\200016 - WEDOWEE CWSRF #217.0 CAD\PRODUCTION PLAN\200016 OUTLET & BAFFLE WALL DETAILS.DWG

8/16/2023 12:23:30 PM

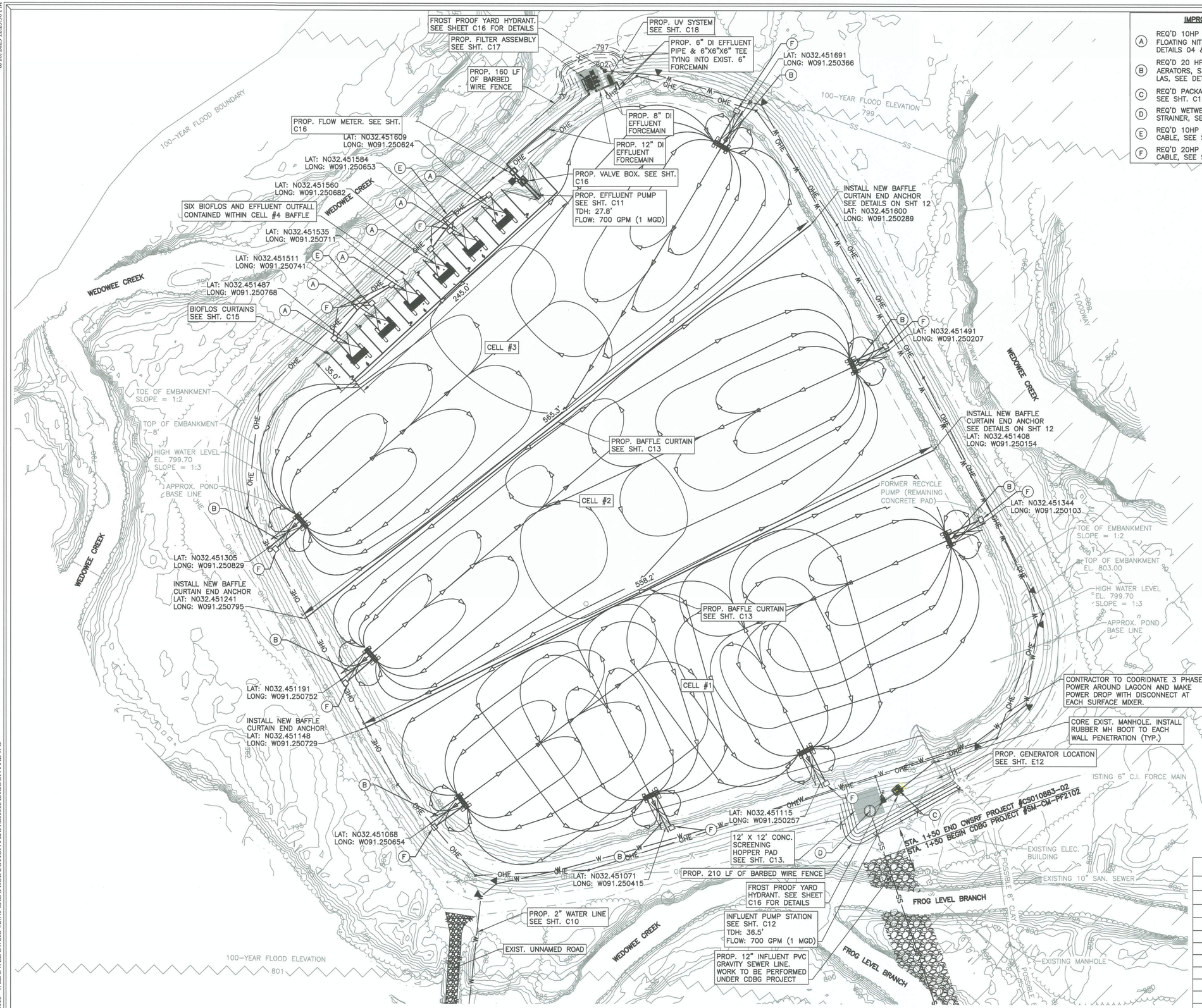

LAGOON PLAN

SCALE: 1" = 40'

IMPROVEMENTS LEGEND

- (A) REQ'D 10HP S&N AIROFLO 8000 SERIES FLOATING NITRIFICATION ROTOR (FNR), SEE DETAILS 04 & 07 ON SHTS. C13 & C14
- (B) REQ'D 20 HP HORIZONTAL ROTOR FLOATING AERATORS, S&N AIROFLO 2200 SERIES 30' LAS, SEE DETAIL 05 ON SHT. C14
- (C) REQ'D PACKAGED INFLUENT PUMP STATION, SEE SHT. C12
- (D) REQ'D WETWELL W/ RAPTOR MICRO STRAINER, SEE SHT. C14
- (E) REQ'D 10HP TRIPLEX PANEL W/ POWER CABLE, SEE SHT. C19
- (F) REQ'D 20HP SIMPLEX PANEL W/ POWER CABLE, SEE SHT. C19

CONTRACTOR NOTES:

1. CONTRACTOR TO WORK WITH SUPPLIER TO VERIFY IN SUBMITTALS THAT LOCATIONS ARE ACCEPTABLE TO THE MANUFACTURER AND PROVIDE THE MOST EFFICIENT USE OF MIXING ENERGY.
2. CONTRACTOR TO WORK WITH LOCAL POWER AUTHORITY TO PROVIDE 3 PHASE POWER AROUND THE LEVEE WITH POWER DROP TO EACH MECHANICAL SOURCE REQUIRING 3 PHASE POWER.
3. EACH UNIT TO RECEIVE POWER DISCONNECT SWITCH AT THE UNIT.
4. CONFIRM EACH POWER POLE LOCATION DOES NOT INTERFERE WITH EXISTING UTILITIES BURIED OR EXPOSED AT THE SURFACE.

INFLUENT PS & MH PAD CUT & FILL VOLUME SWELL FACTOR: 1.25, LOAD FACTOR: 0.80	
CUT VOLUME	0.0 CY
FILL VOLUME	435 CY
EFFLUENT FILTER & UV SYSTEMS PAD CUT & FILL VOLUME SWELL FACTOR: 1.25, LOAD FACTOR: 0.80	
CUT VOLUME	0.0 CY
FILL VOLUME	290 CY

ITEM	QTY	DESC.	MAT'L & SIZE
(A)	6	10 HP BIOFLO	
(B)	8	20 HP 2200 30' LAS	
(C)	1	PACKAGED PUMP STATION	
(D)	1	RAPTOR MICRO STRAINER	

REVISIONS

#	DESCRIPTION	DATE	BY
1			
2			
3			
4			
5			
6			

LAGOON OVERALL PLAN PROPOSED
WEDOWEE SEWER SYSTEM IMPROVEMENTS
WEDOWEE WATER, SEWER, & GAS BOARD
TOWN OF WEDOWEE
RANDOLPH COUNTY, ALABAMA

ALABAMA LICENSED No. 24110 PROFESSIONAL ENGINEER BARTLEY W. TAFF 8-16-2023

THE KELLEY GROUP
A CIVIL ENGINEERING COMPANY
850 Corporate Pwky, Suite 104 Birmingham, Alabama 35242
301 N Dickson St, Tuscumbia, AL 35674

ATTENTION: THIS BAR = 1 INCH ON ORIGINAL DRAWING. ADJUST SCALE IF THIS BAR ≠ 1 INCH.

PROJECT NO: 20-0016
DRAWN BY: TCW
CHECKED BY: BWT
SCALE: AS NOTED
DATE: 08/2023

SHEET NO. C9

R:\2020\20016 - WEDOWEE CWSRF #21-0 CAD\PRODUCTION PLAN\20016 LAGOON PP.DWG

8/9/2023 2:21:23 PM

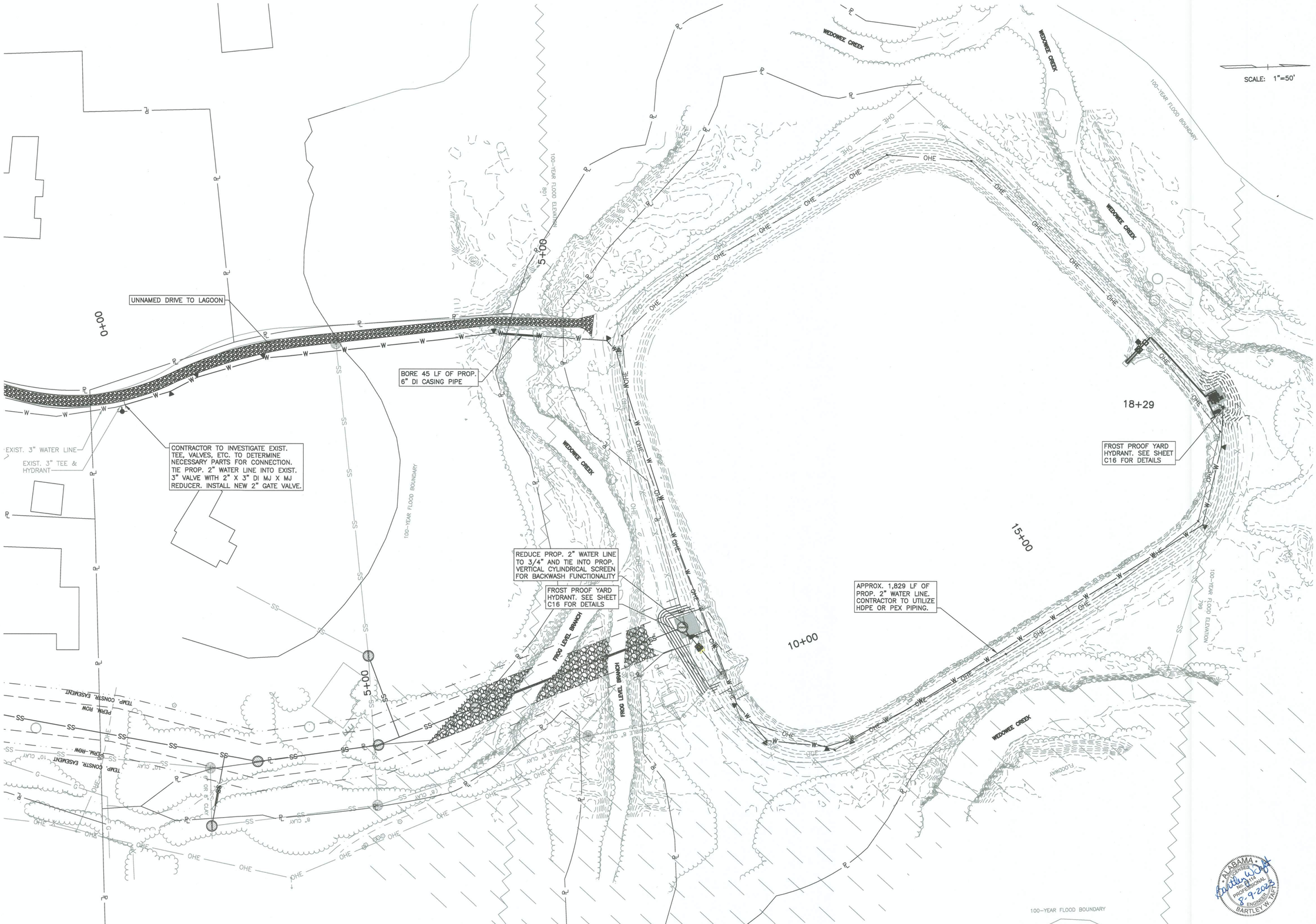

WATER LINE PLAN

SCALE: 1" = 50'

REVISIONS			
#	DESCRIPTION	DATE	BY
1			
2			
3			
4			
5			
6			

WATER LINE PLAN PROPOSED
WEDOWEE SEWER SYSTEM IMPROVEMENTS
WEDOWEE WATER, SEWER, & GAS BOARD
TOWN OF WEDOWEE
RANDOLPH COUNTY, ALABAMA

THE KELLEY GROUP
• A CIVIL ENGINEERING COMPANY •
850 Corporate Pwky, Suite 104 Birmingham, Alabama 35242
301 N Dickson St, Tuscumbia, AL 35674

ATTENTION:
THIS BAR = 1 INCH ON ORIGINAL DRAWING. ADJUST SCALE IF THIS BAR ≠ 1 INCH.

1"

PROJECT NO: 20-0016
DRAWN BY: TCW
CHECKED BY: BWT
SCALE: AS NOTED
DATE: 08/2023

ALABAMA REGISTERED ENGINEER NO. 28174 PROFESSIONAL ENGINEER BARTLEY, IV
Bartley W. Tutt
8-9-2023

SHEET NO.
C10

R:\2020\200016 - WEDOWEE CWSRF #217.0 CAD\BASE PLAN\200016 - W101.DWG

8/9/2023 2:22:01 PM

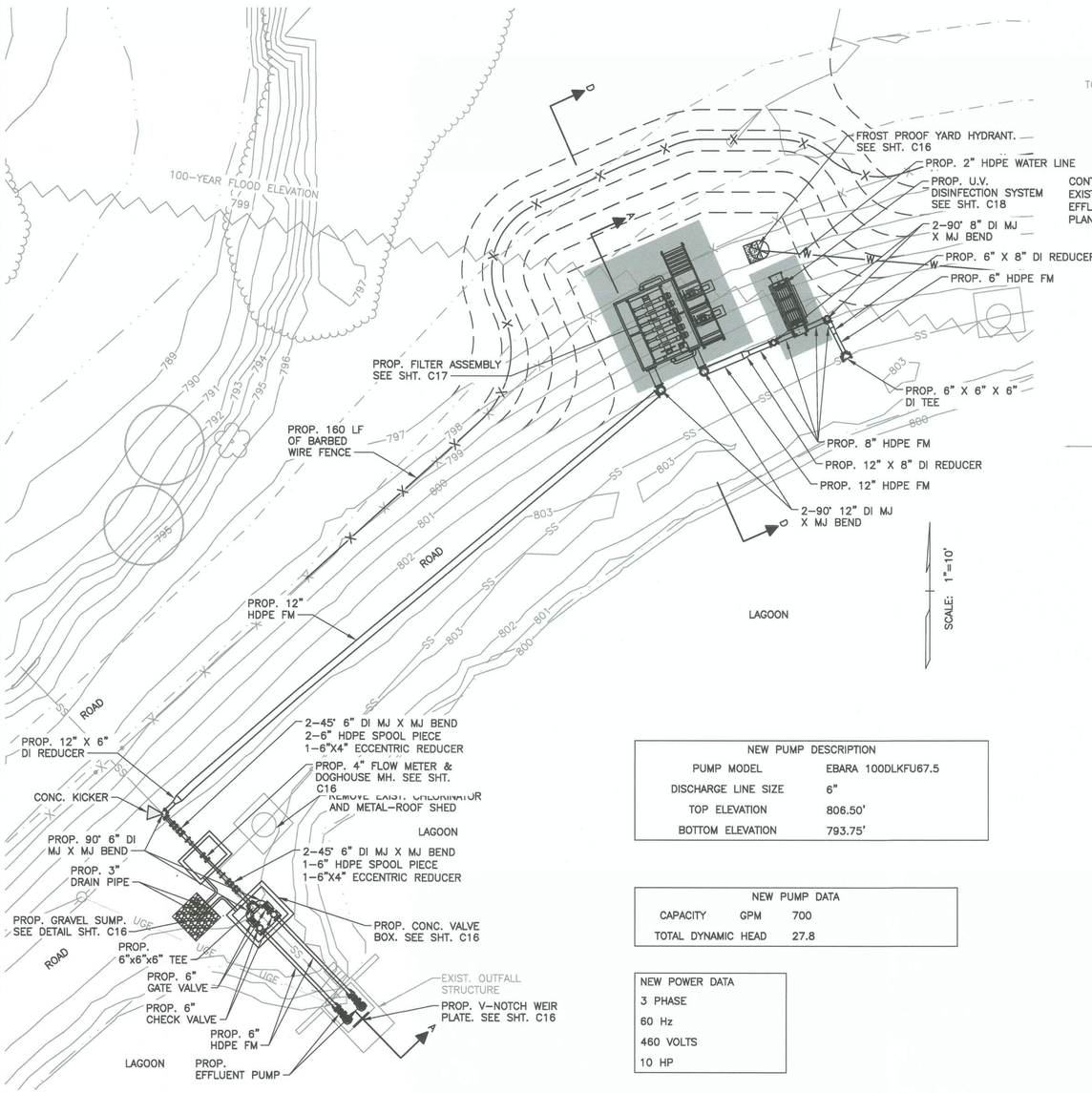

PROPOSED OUTFALL PLAN

SCALE: 1" = 10'

NEW PUMP DESCRIPTION	
PUMP MODEL	EBARA 100DLKFU67.5
DISCHARGE LINE SIZE	6"
TOP ELEVATION	806.50'
BOTTOM ELEVATION	793.75'

NEW PUMP DATA		
CAPACITY	GPM	700
TOTAL DYNAMIC HEAD		27.8

NEW POWER DATA
3 PHASE
60 Hz
460 VOLTS
10 HP

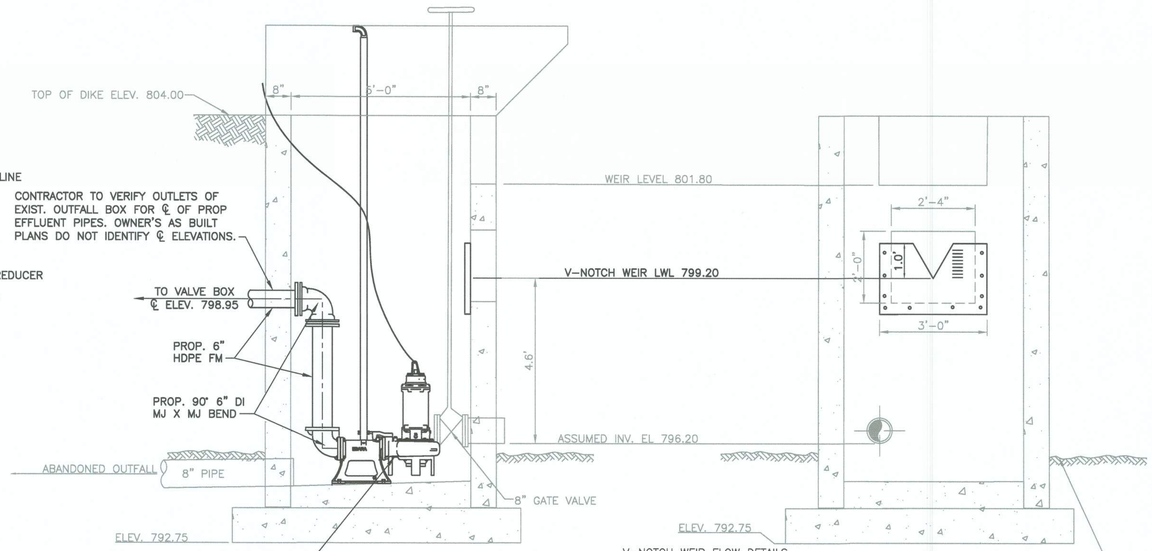

SECTION B-B

SCALE: 1/2" = 1'

SECTION C-C

SCALE: 1/2" = 1'

V-NOTCH WEIR FLOW DETAILS

ELEV. (FT)	FLOW (GPD)	HEIGHT (FT)
799.20	0	0.00
799.30	0	0.10
799.40	6463	0.20
799.50	12926	0.30
799.60	25853	0.40
799.70	45242	0.50
799.80	71095	0.60
799.90	103411	0.70
799.94	120000	0.74
800.00	142190	0.80
800.10	187430	0.90
800.20	245600	1.00

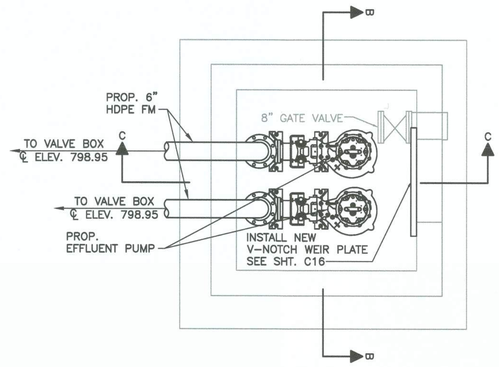

EFFLUENT STRUCTURE PLAN VIEW

SCALE: 1/2" = 1'

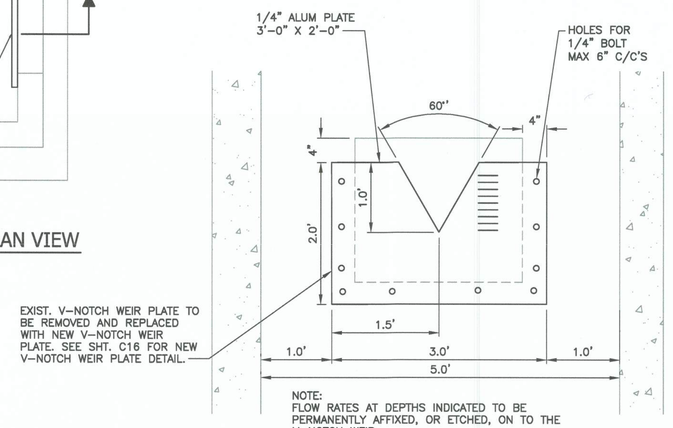

DETAIL OF NEW V-NOTCH WEIR (60°)

SCALE: 1"=1'

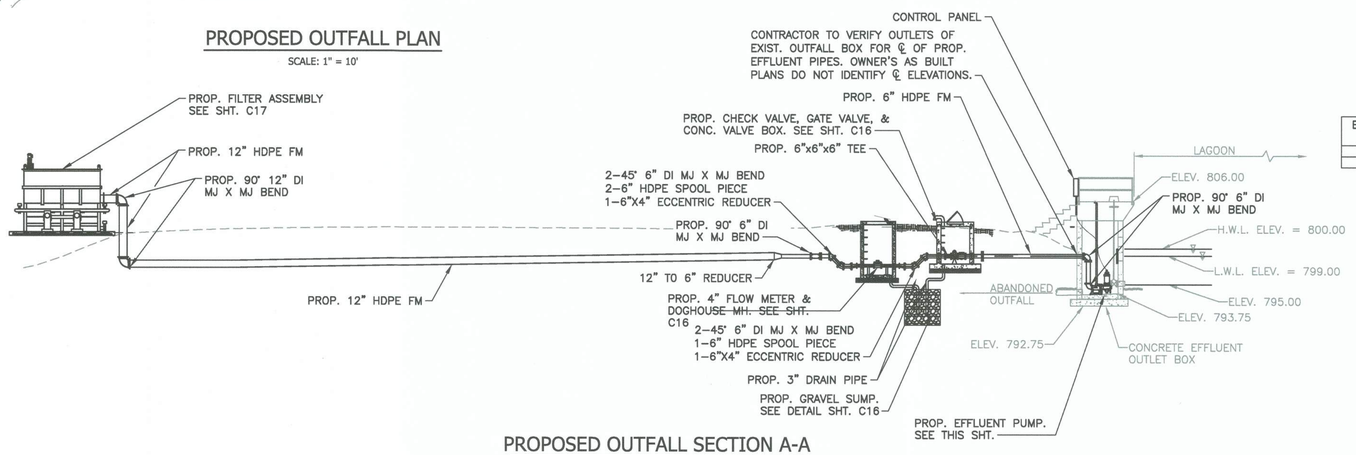

PROPOSED OUTFALL SECTION A-A

SCALE: 1" = 10'

EFFLUENT EQUIPMENT PAD CUT & FILL VOLUME SWELL FACTOR: 1.25, LOAD FACTOR: 0.80	
CUT VOLUME	0.0 CY
FILL VOLUME	290 CY

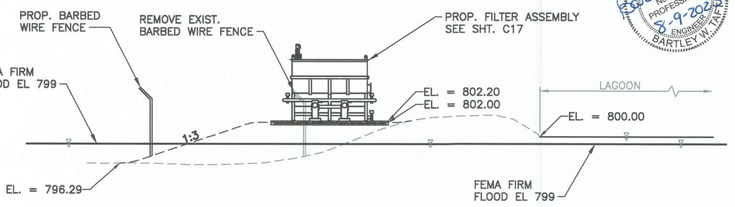

PROPOSED GRADING SECTION D-D

SCALE: 1" = 10'

REVISIONS			
#	DESCRIPTION	DATE	BY
1			
2			
3			
4			
5			
6			

OUTLET STRUCTURE IMPROVEMENTS
WEDOWEE SEWER SYSTEM IMPROVEMENTS
WEDOWEE WATER, SEWER, & GAS BOARD
TOWN OF WEDOWEE
RANDOLPH COUNTY, ALABAMA

THE KELLEY GROUP
• A CIVIL ENGINEERING COMPANY •
850 Corporate Pwky, Suite 104 301 N Dickson St,
Birmingham, Alabama 35242 Tuscumbia, AL 35674

ATTENTION:
THIS BAR = 1 INCH ON ORIGINAL DRAWING. ADJUST SCALE IF THIS BAR ≠ 1 INCH.

1"

PROJECT NO: 20-0016
DRAWN BY: TCW
CHECKED BY: BWT
SCALE: AS NOTED
DATE: 08/2023

SHEET NO.
C11

R:\2020\200016 - WEDOWEE CWSRF #217.0 CAD\PRODUCTION PLAN\200016 OUTLET & BAFFLE WALL DETAILS.DWG

8/16/2023 12:33:12 PM

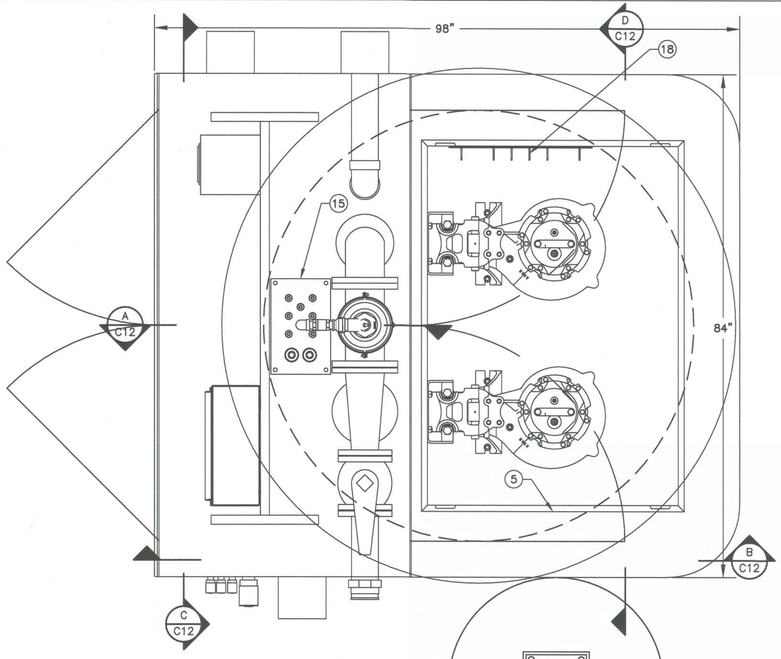

REQ'D PUMP HOIST. SEE SHT. C15 FOR FOUNDATION DETAIL.

PLAN - EL. 804.50

SCALE: 1" = 1'

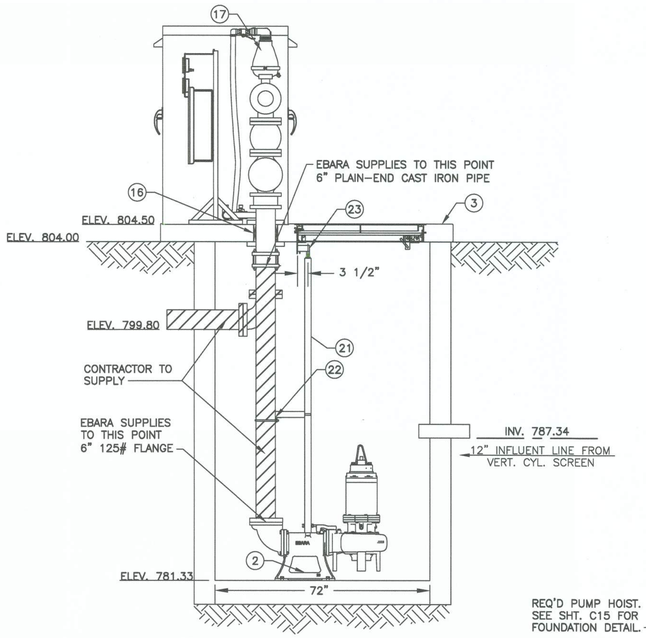

B | PUMP STATION SECTION

SCALE: 1" = 2'

PUMP PERFORMANCE CRITERIA	
PRIMARY DESIGN CONDITION:	700 GPM @ 43.3 TDH
HYDRAULIC EFFICIENCY:	65.84%
SECONDARY DESIGN CONDITION:	1000 GPM @ 36' TDH
HYDRAULIC EFFICIENCY:	57%
MIN. SHUTOFF HEAD:	77.50
MIN. MOTOR SIZE:	15 HP
MOTOR SPEED:	1760 RPM (NOMINAL)
IMPELLER TYPE/DESIGN:	SEMI-OPEN, MIXED FLOW, SOLIDS HANDLING
MIN. SPHERE SIZE:	3" DIAMETER
EBARA MODEL:	100DLMKFU611
STATION PIPE SIZING:	0'-6"

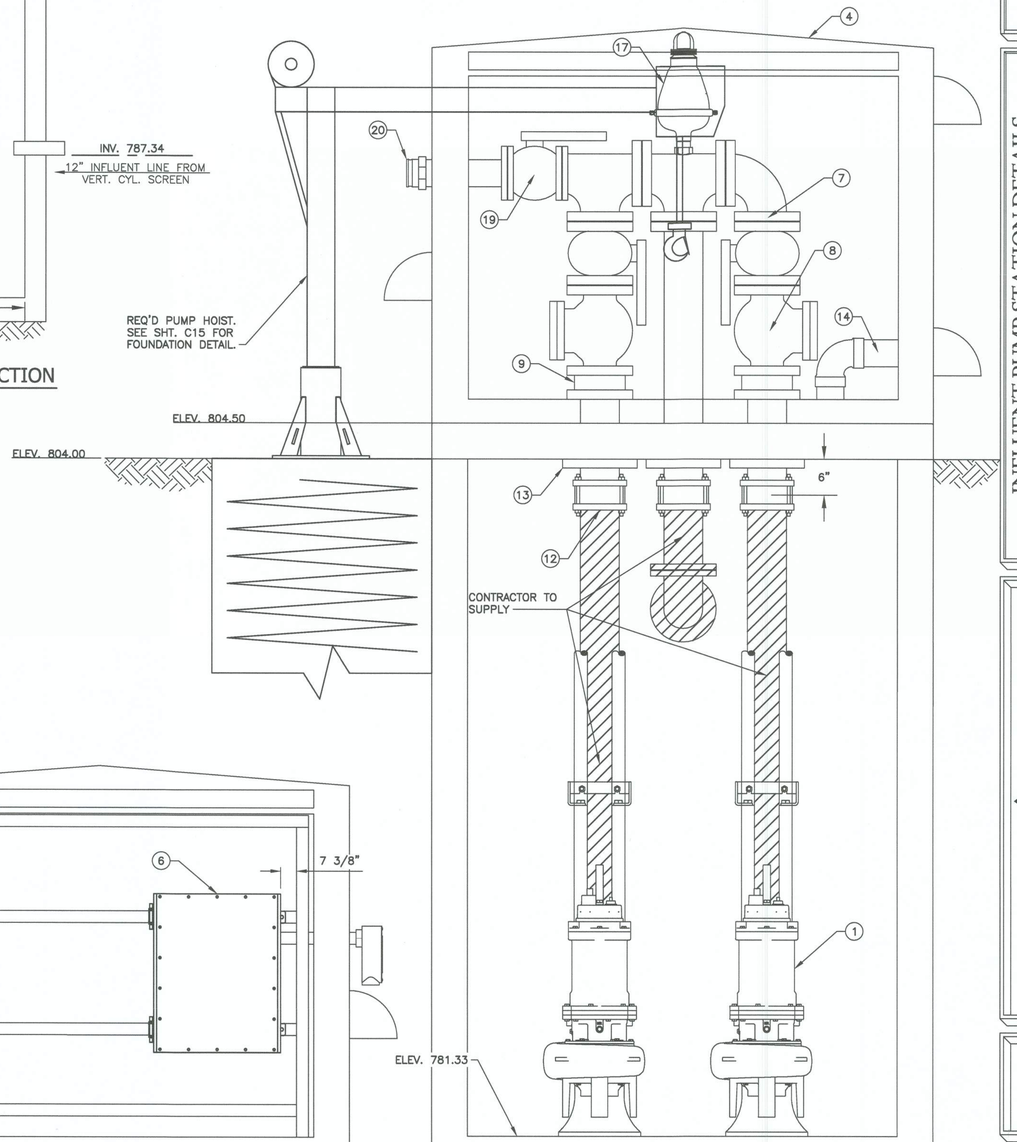

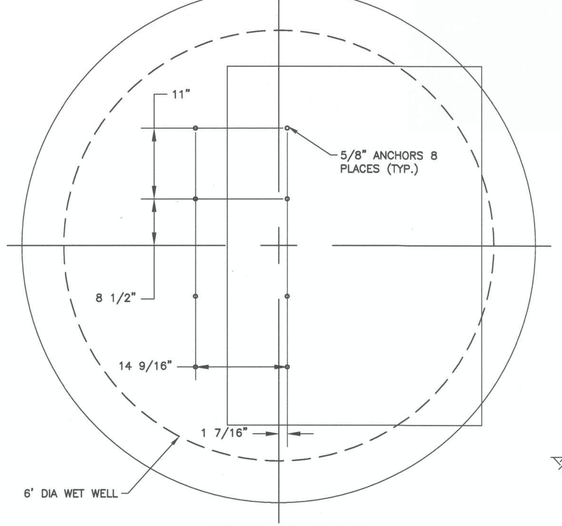

PLAN - EL. 781.33

SCALE: 1" = 1'

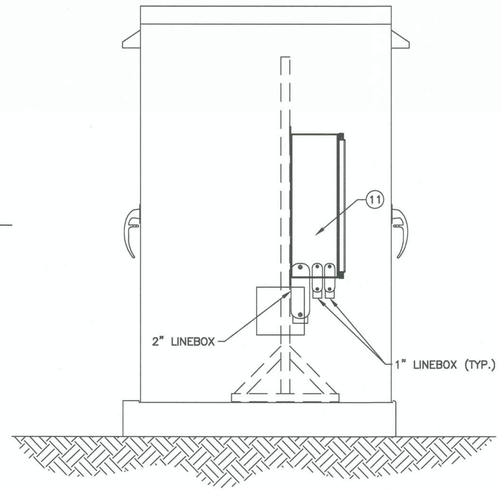

A | LINEBOX/CONDUIT SECTION

SCALE: 1" = 1'
NOTE: LOCATIONS APPROXIMATE

C | LINEBOX/CONDUIT SECTION

SCALE: 1" = 1'
NOTE: LOCATIONS APPROXIMATE

D | PUMP STATION SECTION

SCALE: 1" = 1'

ITEM	QTY	DESCRIPTION	MAT'L & SIZE
1	2	PUMP	100DLMKFU611
2	2	QUICK DISCHARGE CONNECTOR	LL125 WITH 6" ELBOW
3	1	BASE	POLYMER CONCRETE
4	1	ENCLOSURE	FIBERGLASS
5	1	HATCH WITH GRATE	36"X60" DOUBLE DOOR
6	1	JUNCTION BOX	24" X 20" X 8"
7	2	PLUG VALVE	6" CAST IRON
8	2	CHECK VALVE	6" CAST IRON WEIGHTED
9	2	PRESSURE SENSORS	6" PSW W/ ACETAL FACES
10	2	PRESSURE GAUGE	6" DUAL NEEDLE GAUGES
11	2	ELECTRICAL CONNECTOR	PVC LB SIZE PER DETAIL A

12	3	COMPRESSION COUPLING	BY OTHERS
13	3	THRUST CLAMP	CAST IRON
14	1	STATION AIR VENT	PVC
15	1	ARV PLATE	ALUMINUM PLATE
16	3	LINK SEAL	EPDM W/ SS FASTENERS
17	1	AIR RELIEF VALVE	ARI D025 W/ SS FITTINGS
18	1	CABLE HANGER	304 STAINLESS
19	1	PLUG VALVE	4" CAST IRON
20	1	BYPASS CONNECTION	4" MALE OPW
21	2	2" GUIDE RAIL	BY OTHERS
22	2	INTERMEDIATE BRACKET	304 STAINLESS STEEL
23	2	UPPER GUIDE BRACKET	304 STAINLESS STEEL

REVISIONS

#	DESCRIPTION	DATE	BY
1			
2			
3			
4			
5			
6			

INFLUENT PUMP STATION DETAILS

WEDOWEE SEWER SYSTEM IMPROVEMENTS
WEDOWEE WATER, SEWER, & GAS BOARD
TOWN OF WEDOWEE
RANDOLPH COUNTY, ALABAMA

THE KELLEY GROUP
• A CIVIL ENGINEERING COMPANY •
850 Corporate Pwky, Suite 104 Birmingham, Alabama 35242
301 N Dickson St, Tuscumbia, AL 35674

ATTENTION:
THIS BAR = 1 INCH ON ORIGINAL DRAWING. ADJUST SCALE IF THIS BAR ≠ 1 INCH.

1"

PROJECT NO: 20-0016
DRAWN BY: TCW
CHECKED BY: BWT
SCALE: AS NOTED
DATE: 08/2023

ALABAMA LICENSED No. 29914 PROFESSIONAL ENGINEER BARTLEY W. TAYLOR
8-16-2023

SHEET NO.
C12

R:\2020\200016 - WEDOWEE CWSRF #217.0 CAD\PRODUCTION PLAN\200016-DT06.DWG

8/16/2023 12:33:18 PM

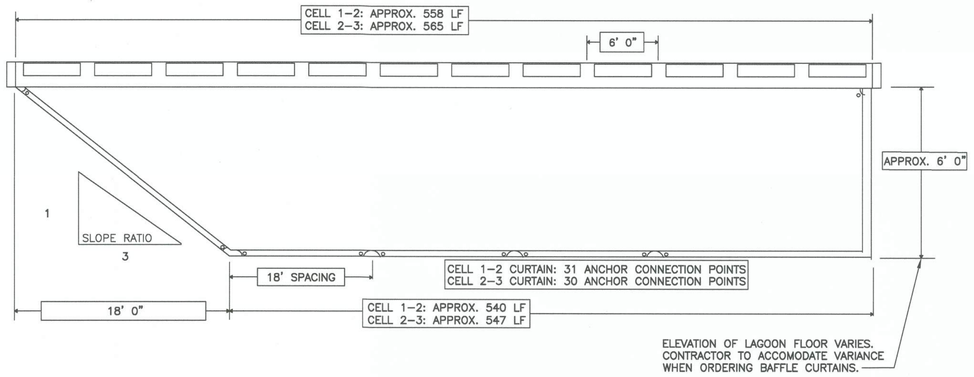

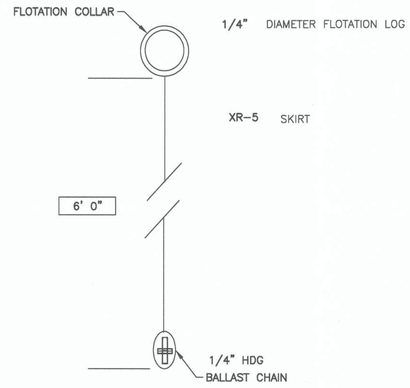

01 | BAFFLE CURTAIN LAYOUT DETAIL
SCALE: N.T.S.

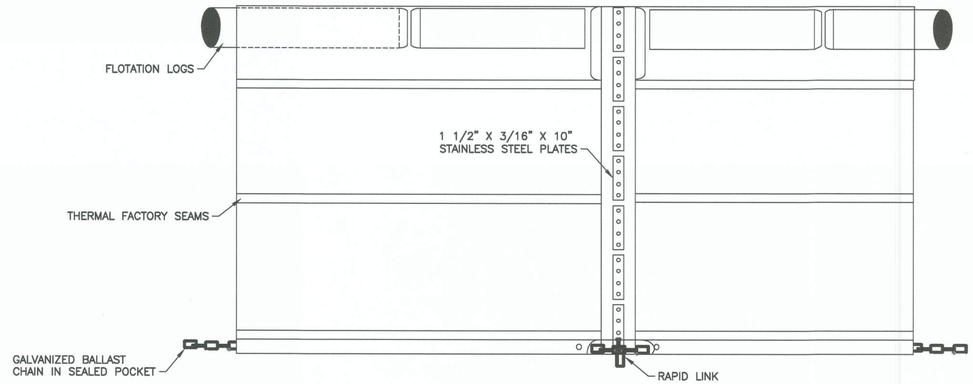

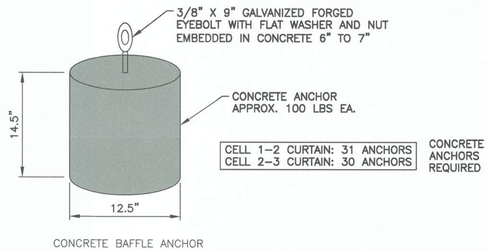

CONCRETE BAFFLE ANCHOR

02 | BAFFLE CURTAIN CONNECTION DETAIL
SCALE: N.T.S.

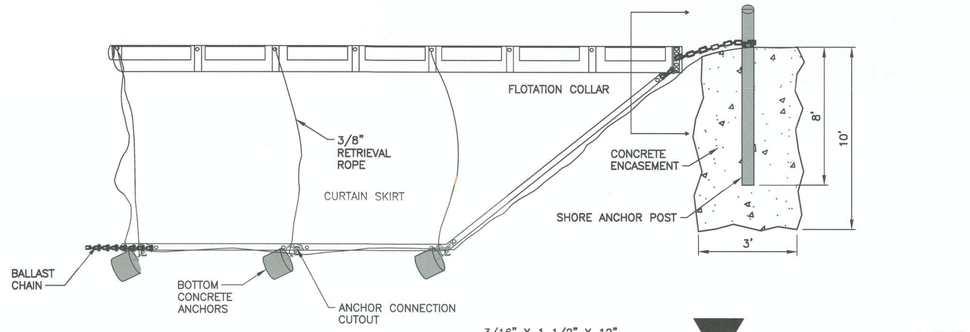

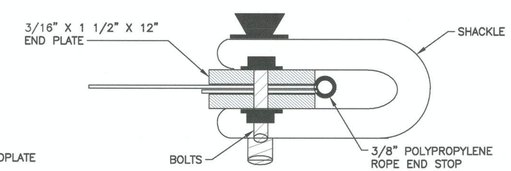

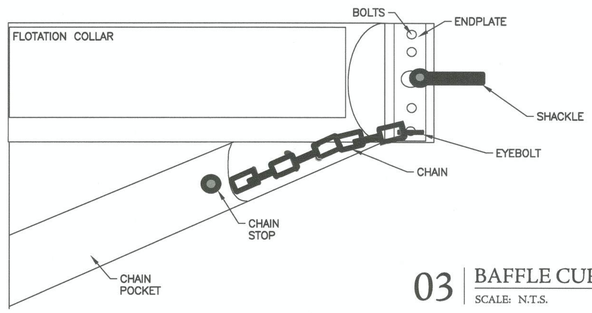

03 | BAFFLE CURTAIN DETAIL
SCALE: N.T.S.

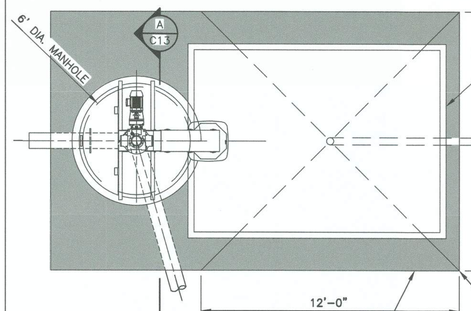

PLAN
SCALE: 1" = 4'

CONTRACTOR TO
PROVIDE APPROX.
275 CU. FT. OF
CONCRETE FOR WET
WELL AND PADS

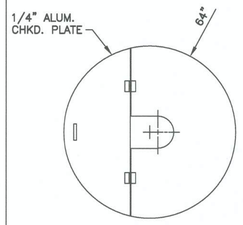

HINGED ACCESS COVER
SCALE: 1" = 1'

NOTE:
CONTRACTOR SHALL COORDINATE WITH A LOCAL SOLID WASTE REMOVAL COMPANY TO SUPPLY A STEEL DUMPSTER FOR USED BAG STORAGE, AND SHALL COORDINATE WITH THE SOLID WASTE REMOVAL COMPANY IN ORDER THAT AN ACCOUNT FOR DUMPSTER SERVICE IS ESTABLISHED IN THE NAME OF THE OWNER.

CONTRACTOR SHALL WORK WITH MATERIAL SUPPLIER TO COORDINATE SCREENINGS WETWELL DEPTH AND CDBG CONTRACTOR FOR DIAMETER AND SIZE OF INFLUENT GRAVITY SEWER.

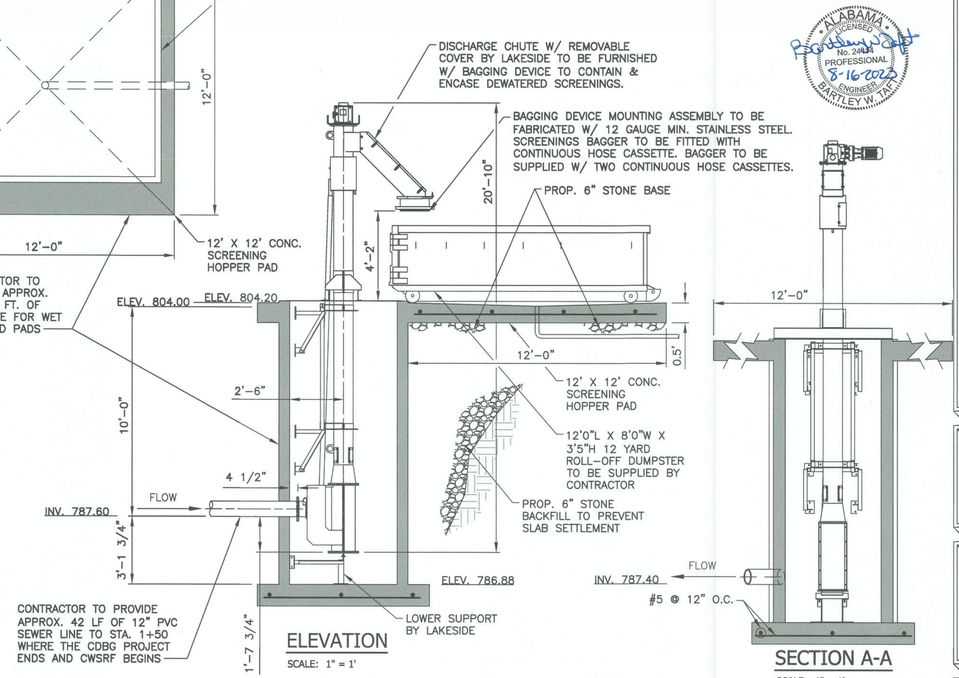

ELEVATION
SCALE: 1" = 1'

SECTION A-A
SCALE: 1" = 1'

04 | RAPTOR MICRO STRAINER DETAIL
SCALE: N.T.S.

ALABAMA
LICENSED
No. 24434
PROFESSIONAL
ENGINEER
BARTLEY W. TAYLOR
8-16-2023

REVISIONS

#	DESCRIPTION	DATE	BY
1			
2			
3			
4			
5			
6			

STANDARD DETAILS
WEDOWEE SEWER SYSTEM IMPROVEMENTS
WEDOWEE WATER, SEWER, & GAS BOARD
TOWN OF WEDOWEE
RANDOLPH COUNTY, ALABAMA

THE KELLEY GROUP
• A CIVIL ENGINEERING COMPANY •
850 Corporate Pwky, Suite 104 Birmingham, Alabama 35242
301 N Dickson St, Tuscumbia, AL 35674

ATTENTION:
THIS BAR = 1 INCH ON
ORIGINAL DRAWING.
ADJUST SCALE IF THIS
BAR ≠ 1 INCH.
1"

PROJECT NO: 20-0016
DRAWN BY: TCW
CHECKED BY: BWT
SCALE: AS NOTED
DATE: 08/2023

SHEET NO.
C13

R:\2020\20016 - WEDOWEE CWSRF #217.0 CAD\PRODUCTION PLAN\20016-DT06.DWG

8/9/2023 2:22:29 PM

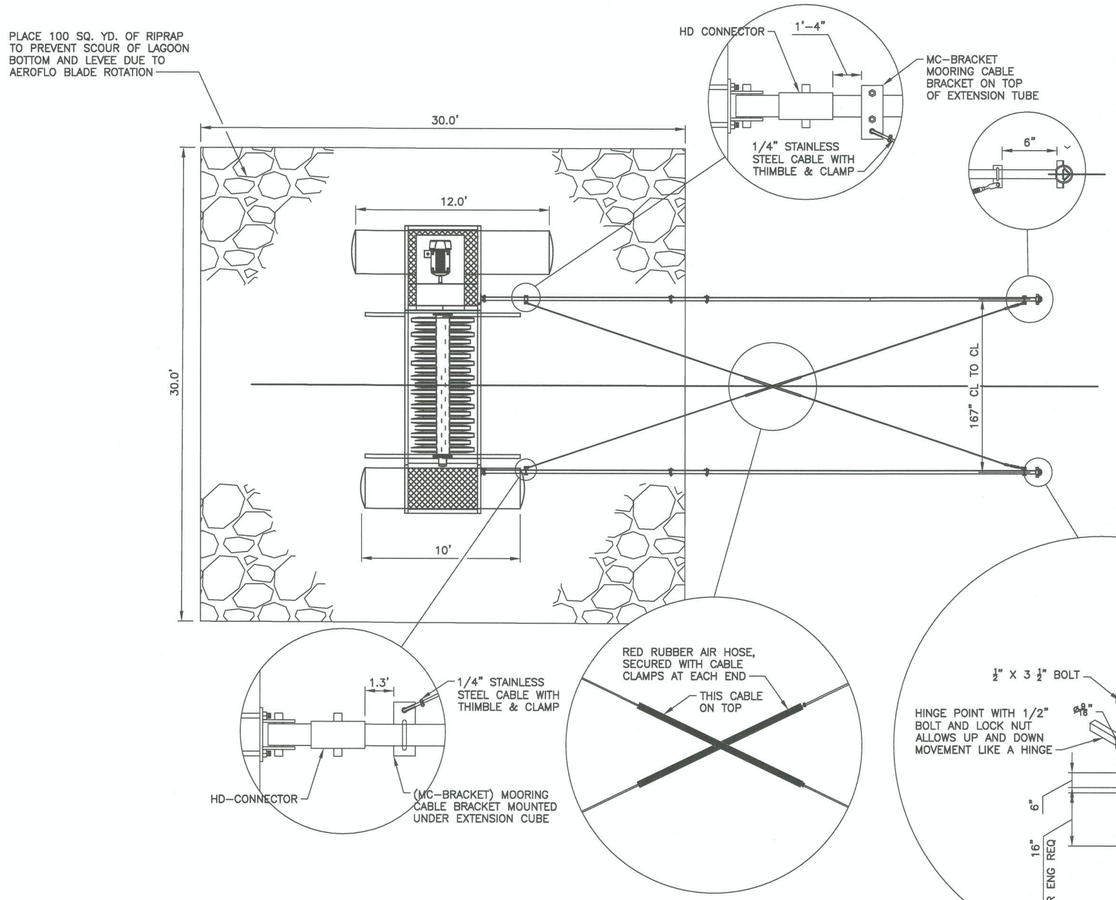

TYP. PLAN LAYOUT

SCALE: N.T.S.

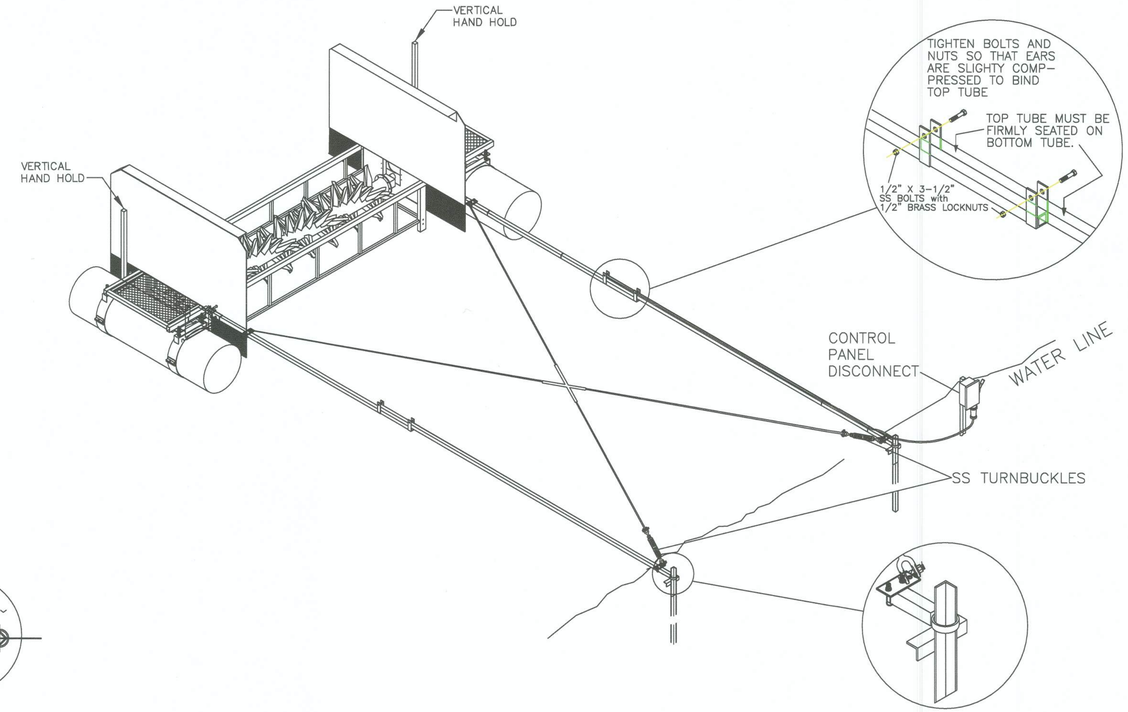

TYP. ISOMETRIC VIEW

SCALE: N.T.S.

NOTES:

1. DIG OUT EARTH 12" X 16"
2. DRIVE STAKE 36" INTO EARTH
3. FILL WITH CONCRETE
4. THEN DROP RING OVER TOP TO REST ON CROSS ANGLE

05 20 HP 2200 30' LEVEE ANCHORING SYSTEM (LAS) PLAN VIEW DETAIL

SCALE: N.T.S.

REVISIONS			
#	DESCRIPTION	DATE	BY
1			
2			
3			
4			
5			
6			

STANDARD DETAILS
WEDOWEE SEWER SYSTEM IMPROVEMENTS
WEDOWEE WATER, SEWER, & GAS BOARD
TOWN OF WEDOWEE
RANDOLPH COUNTY, ALABAMA

THE KELLEY GROUP
• A CIVIL ENGINEERING COMPANY •
850 Corporate Pwky, Suite 104 Birmingham, Alabama 35242
301 N Dickson St, Tuscumbia, AL 35674

ATTENTION:
THIS BAR = 1 INCH ON ORIGINAL DRAWING. ADJUST SCALE IF THIS BAR ≠ 1 INCH.

1"

PROJECT NO: 20-0016
DRAWN BY: TCW
CHECKED BY: BWT
SCALE: AS NOTED
DATE: 08/2023

ALABAMA LICENSED No. 24314 PROFESSIONAL ENGINEER BARTLEY W. TAIT
9-9-2023

SHEET NO.
C14

R:\2020\200016 - WEDOWEE CWSRF #2\7.0 CAD\PRODUCTION PLAN\200016-DT06.DWG

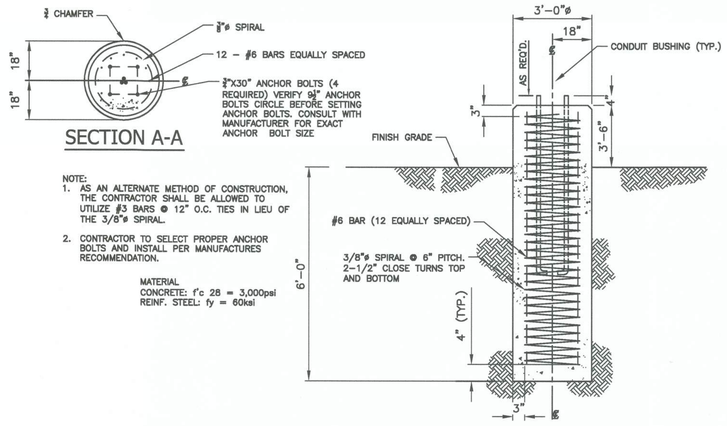

06 | PUMP HOIST FOOTING DETAIL

SCALE: N.T.S.

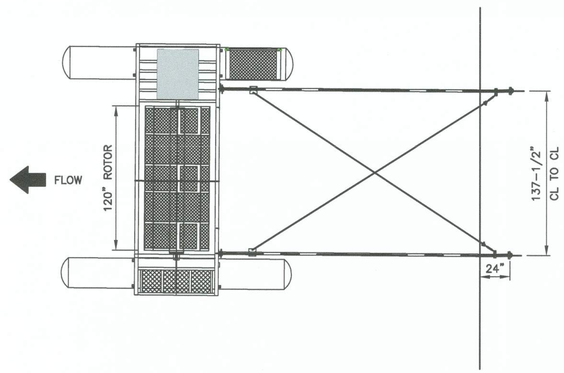

07 | 10HP BIOFLO - 10 FT. ROTOR 20' LAS ANCHORING PLAN VIEW

SCALE: 1" = 5'

BIOFLO INSTALLATION:

STANDARD ROTATION LEVEE MOUNT:
FROM THE LEVEE THE MOTOR SIDE IS TO THE RIGHT. TURN BUCKLE HAS TO BE ON THE DISCHARGE(FLOW) SIDE OF THE UNIT.

NOTE: TO CHANGE FROM STANDARD ROTATION TO REVERSE ROTATION YOU CAN NOT DO SO BY CHANGING JUST THE MOTOR ROTATION.

REVERSE ROTATION LEVEE MOUNT:
TO REVERSE THE FLOW OF THE UNIT THE ENTIRE UNIT MUST BE TURNED AROUND WHERE THE MOTOR IS TO THE LEFT SIDE. TURN BUCKLE HAS TO BE ON THE DISCHARGE(FLOW) SIDE OF THE UNIT.

NOTE: THE UNIT RUNNING IN WRONG ROTATION WILL CAUSE BELT TO SLIP.

SAFETY NOTE: MOTOR COVER IS TO BE CHAINED OFF WHEN SERVICING TO PREVENT ACCIDENTAL CLOSING OF HOOD.

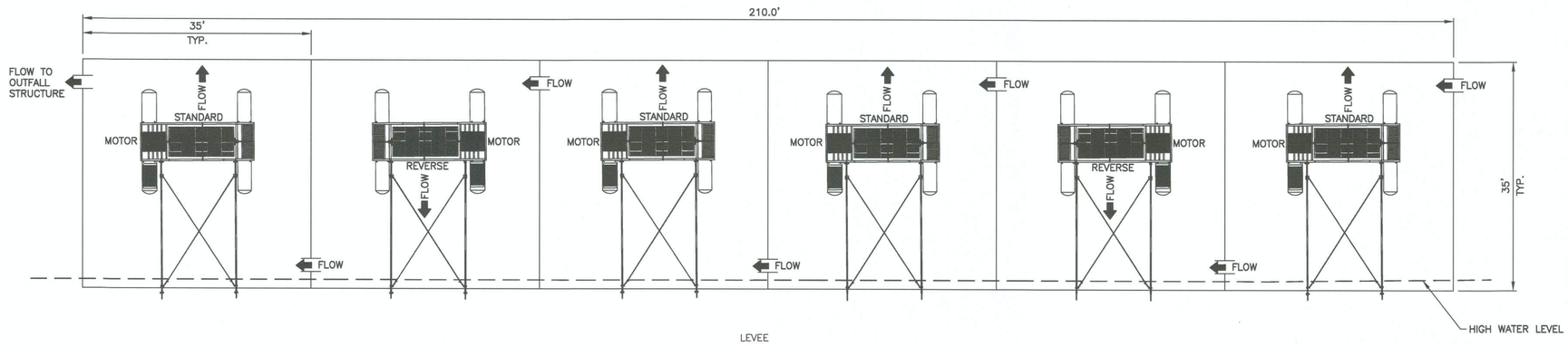

08 | 10HP BIOFLO TYPICAL LAYOUT VIEW

SCALE: 1" = 10'

REVISIONS

#	DESCRIPTION	DATE	BY
1			
2			
3			
4			
5			
6			

STANDARD DETAILS
WEDOWEE SEWER SYSTEM IMPROVEMENTS
WEDOWEE WATER, SEWER, & GAS BOARD
TOWN OF WEDOWEE
RANDOLPH COUNTY, ALABAMA

THE KELLEY GROUP
• A CIVIL ENGINEERING COMPANY •
850 Corporate Pwky, Suite 104 Birmingham, Alabama 35242
301 N Dickson St, Tuscumbia, AL 35674

ATTENTION:
THIS BAR = 1 INCH ON ORIGINAL DRAWING. ADJUST SCALE IF THIS BAR ≠ 1 INCH.
1"

PROJECT NO: 20-0016
DRAWN BY: TCW
CHECKED BY: BWT
SCALE: AS NOTED
DATE: 08/2023

ALABAMA LICENSED No. 31114 PROFESSIONAL ENGINEER BARTLEY W. TAIT
8-9-2023

SHEET NO.
C15

8/9/2023 2:22:34 PM

R:\2020\200016 - WEDOWEE CWSRF #217.0 CAD\PRODUCTION PLAN\200016-DT06.DWG

8/9/2023 2:23:27 PM

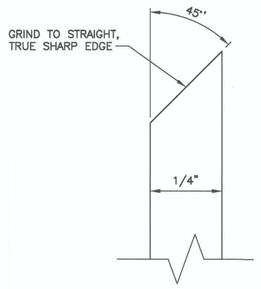

09 | V-NOTCH WEIR PLATE DETAIL

SCALE: 1" = 1/4"

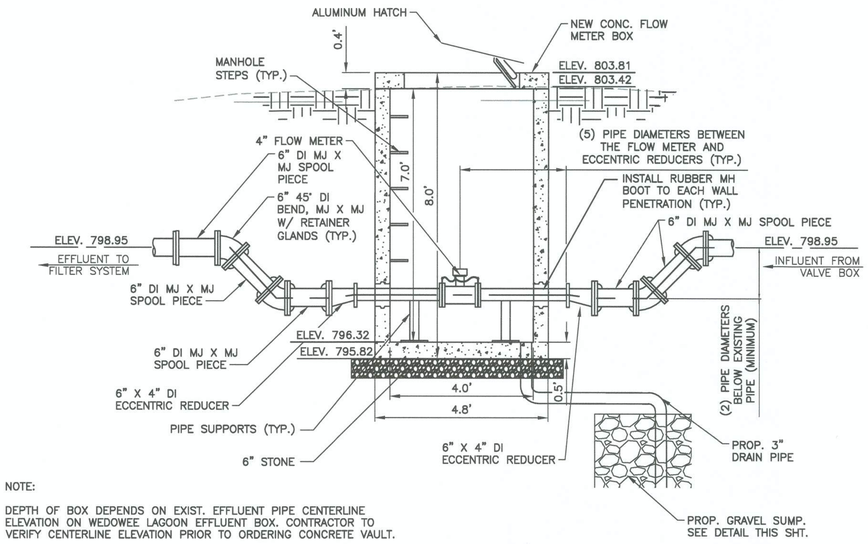

NOTE:

DEPTH OF BOX DEPENDS ON EXIST. EFFLUENT PIPE CENTERLINE ELEVATION ON WEDOWEE LAGOON EFFLUENT BOX. CONTRACTOR TO VERIFY CENTERLINE ELEVATION PRIOR TO ORDERING CONCRETE VAULT.

10 | FLOW METER & METER BOX DETAIL

SCALE: 1" = 2'

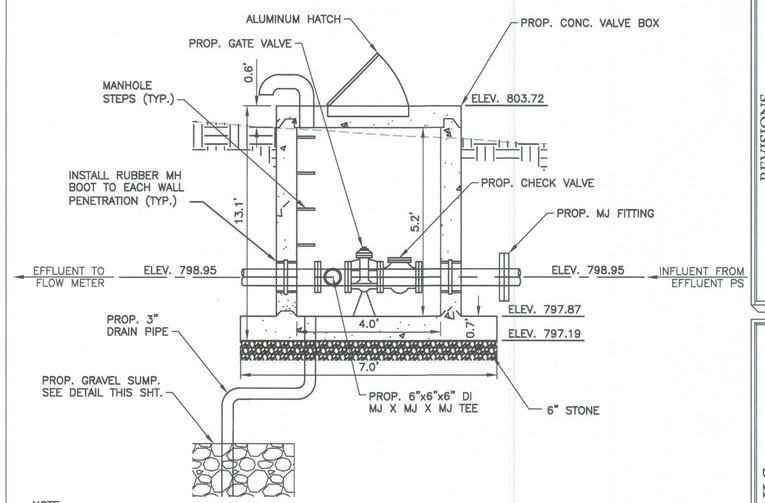

NOTE:

DEPTH OF BOX DEPENDS ON EXIST. EFFLUENT PIPE CENTERLINE ELEVATION ON WEDOWEE LAGOON EFFLUENT BOX. CONTRACTOR TO VERIFY CENTERLINE ELEVATION PRIOR TO ORDERING CONCRETE VAULT.

11 | VALVE BOX DETAIL

SCALE: 1" = 2'

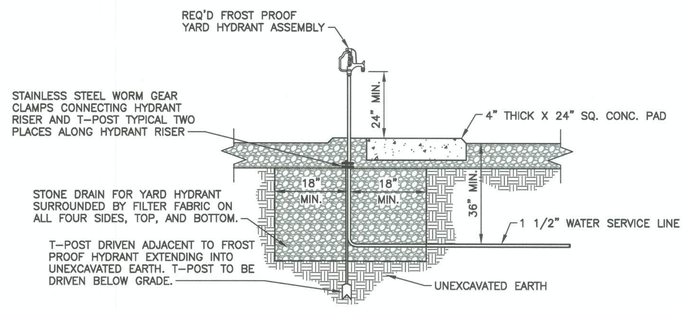

NOTES:

1. YARD HYDRANTS SHALL BE SELF-DRAINING, NON-FREEZING, COMPRESSION TYPE, CAPABLE OF BEING LOCKED CLOSED.
2. PRINCIPAL OPERATING PARTS SHALL BE BRASS AND REMOVABLE FROM YARD HYDRANT FOR SERVICING WITHOUT EXCAVATION.
3. YARD HYDRANTS TO BE SET IN CRUSHED STONE TO ALLOW FOR PROPER DRAINAGE.
4. ALL WATER SERVICES WHERE YARD HYDRANTS ARE INSTALLED MUST BE FURNISHED WITH A BACKFLOW PREVENTION DEVICE, AS APPROVED BY THE WATER DEPARTMENT.
5. FOR WATER SERVICES USED EXCLUSIVELY TO SUPPLY YARD HYDRANTS, A WATER METER PIT (SIZE 1-INCH OR SMALLER) IS TO BE INSTALLED ON THE SERVICE AND THE METER PIT SETTER IS TO BE FURNISHED WITH AN ANGLE BALL VALVE ON INLET SIDE OF METER AND AN ANGLE CARTRIDGE DUAL CHECK VALVE (FOR BACKFLOW PREVENTION) ON OUTLET SIDE OF METER. ONE CONTINUOUS PIECE OF WATER SERVICE PIPE IS TO BE INSTALLED BETWEEN THE OUTLET OF THE METER PIT AND YARD HYDRANT.

12 | YARD HYDRANT DETAIL

SCALE: N.T.S.

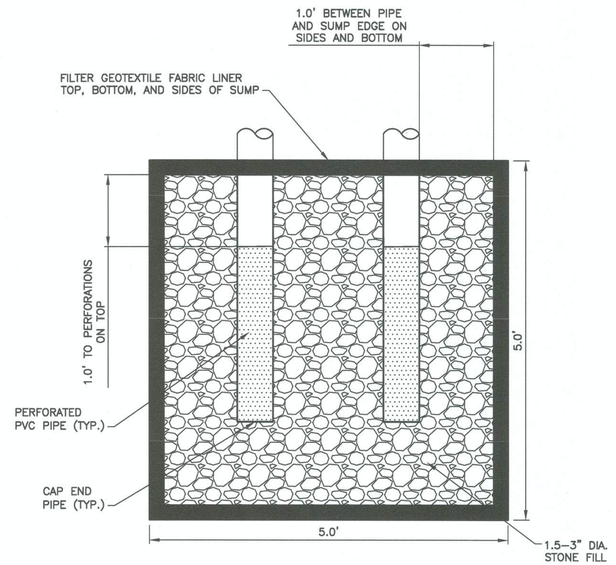

13 | DRAINAGE ROCK SUMP DETAIL

SCALE: 1" = 1'

REVISIONS			
#	DESCRIPTION	DATE	BY
1			
2			
3			
4			
5			
6			

STANDARD DETAILS
WEDOWEE SEWER SYSTEM IMPROVEMENTS
WEDOWEE WATER, SEWER, & GAS BOARD
TOWN OF WEDOWEE
RANDOLPH COUNTY, ALABAMA

THE KELLEY GROUP
• A CIVIL ENGINEERING COMPANY •
850 Corporate Pwky, Suite 104 Birmingham, Alabama 35242
301 N Dickson St, Tuscumbia, AL 35674

ATTENTION:
THIS BAR = 1 INCH ON ORIGINAL DRAWING. ADJUST SCALE IF THIS BAR ≠ 1 INCH.
1"

PROJECT NO: 20-0016
DRAWN BY: TCW
CHECKED BY: BWT
SCALE: AS NOTED
DATE: 08/2023

ALABAMA LICENSED PROFESSIONAL ENGINEER BARTLEY W. TAFT 8-9-2023

SHEET NO.
C16

R:\2020\200016 - WEDOWEE CWSRF #217-0 CAD\PRODUCTION PLAN\200016 OUTLET & BAFFLE WALL DETAILS.DWG

8/9/2023 2:23:37 PM

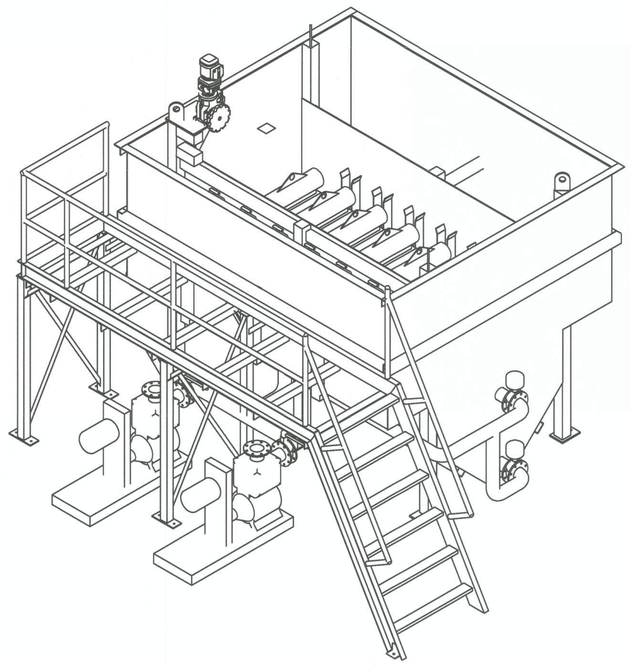

ISOMETRIC

SCALE: 1" = 2'

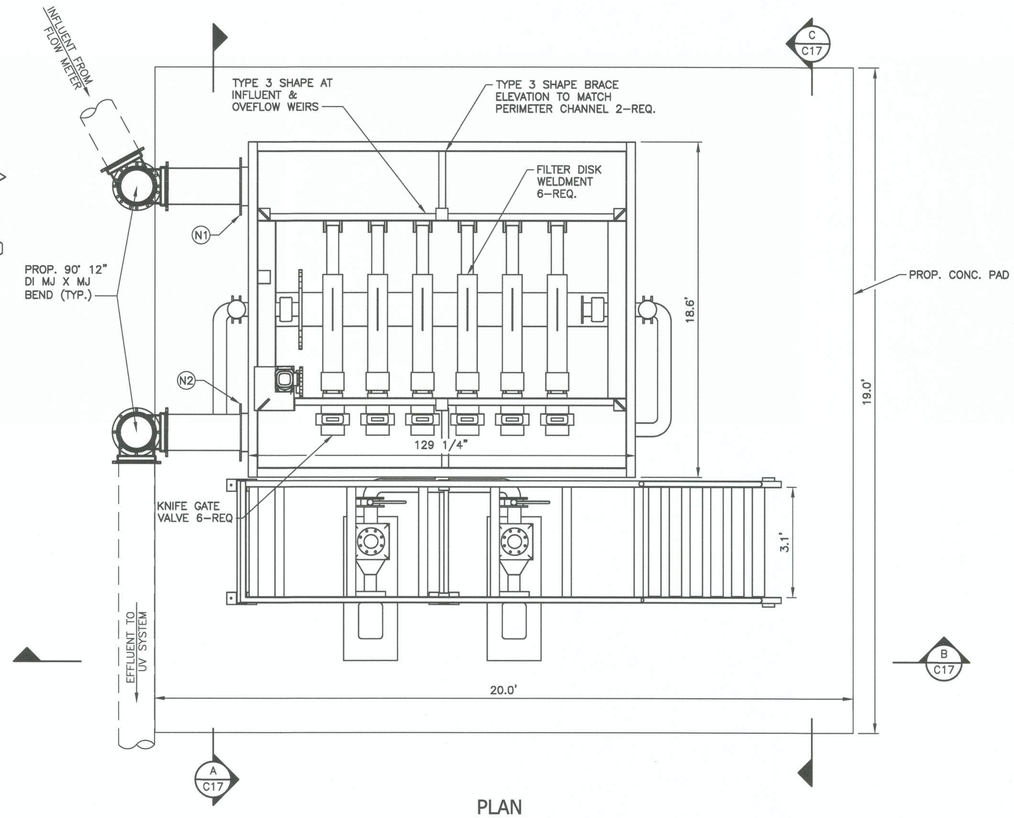

PLAN

SCALE: 1" = 2'

NOZZLE SCHEDULE				
ITEM	QTY.	SIZE / TYPE	DESCRIPTION	NOTE
N1	1	12"FF	INFLUENT	
N2	1	12"FF	EFFLUENT/FILTRATE	
N3/N4	2	4" FF	BACKWASH	
N5	1	4" FF	UNDERDRAIN	
N6	0		OVERFLOW	

NOTES:

1. ALL MAT'L $\frac{3}{16}$" THK. 304SS UNLESS NOTED
2. ALL FLANGES $\frac{1}{4}$" THK. FF. BOLT PATTERN CORRESPONDS TO 150# FLANGES.
3. NOZZLE PROJECTION 6" UNLESS NOTED

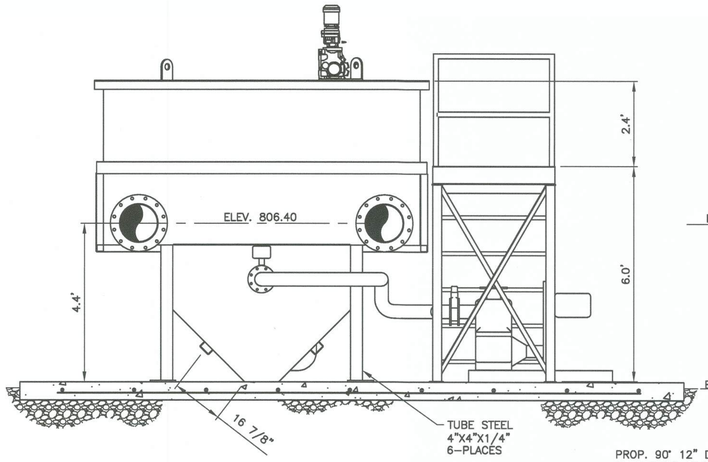

ELEVATION A-A

SCALE: 1" = 2'

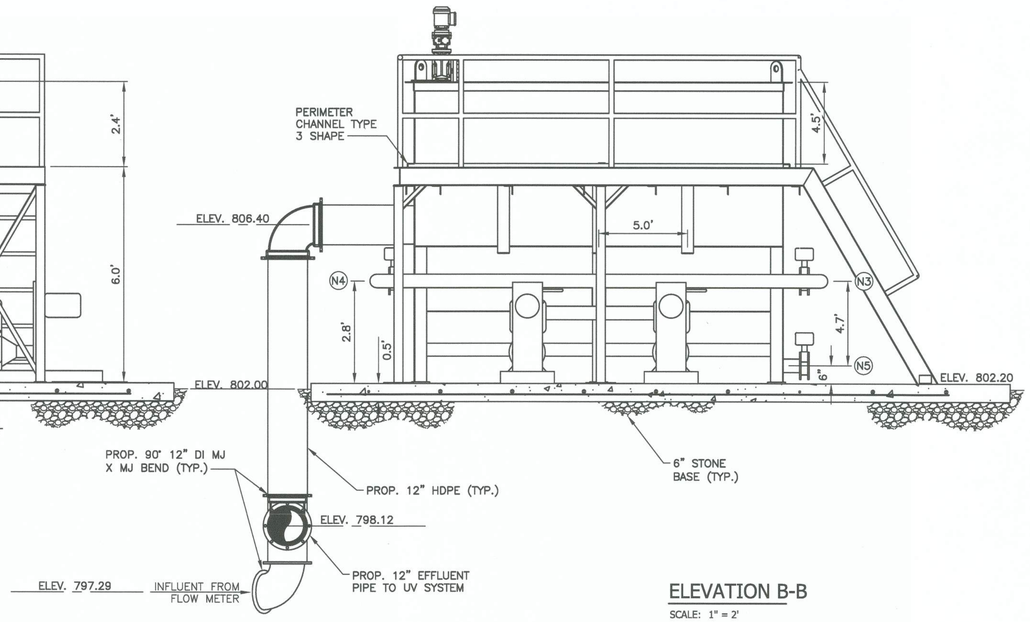

ELEVATION B-B

SCALE: 1" = 2'

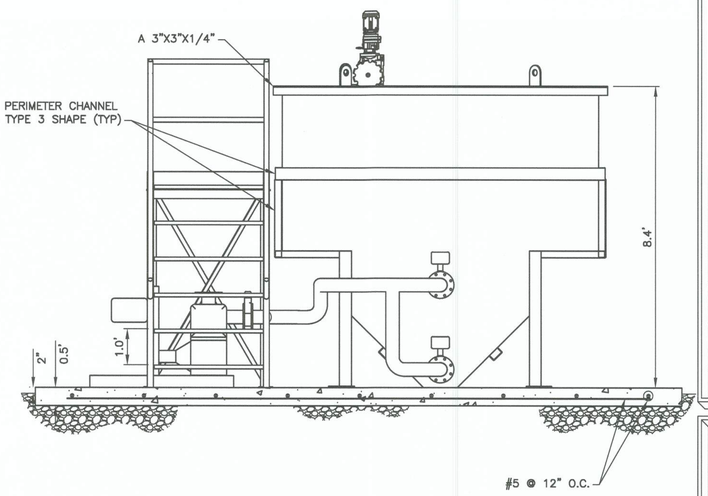

ELEVATION C-C

SCALE: 1" = 2'

14 | FIVE STAR FILTRATION FILTER ASSEMBLY DETAIL

SCALE: 1" = 2'

REVISIONS			
#	DESCRIPTION	DATE	BY
1			
2			
3			
4			
5			
6			

STANDARD DETAILS

WEDOWEE SEWER SYSTEM IMPROVEMENTS
WEDOWEE WATER, SEWER, & GAS BOARD
TOWN OF WEDOWEE
RANDOLPH COUNTY, ALABAMA

THE KELLEY GROUP
• A CIVIL ENGINEERING COMPANY •
850 Corporate Pwky, Suite 104 Birmingham, Alabama 35242
301 N Dickson St, Tuscumbia, AL 35674

ATTENTION:
THIS BAR = 1 INCH ON ORIGINAL DRAWING. ADJUST SCALE IF THIS BAR ≠ 1 INCH.

1"

PROJECT NO: 20-0016
DRAWN BY: TCW
CHECKED BY: BWT
SCALE: AS NOTED
DATE: 08/2023

ALABAMA LICENSED No. 24414 PROFESSIONAL ENGINEER BARTLEY W. TAYLE
8-9-2023

SHEET NO.
C17

R:\2020\200016 - WEDOWEE CWSRF #2170 CAD\PRODUCTION PLANS\200016-DT06.DWG

8/9/2023 2:23:49 PM

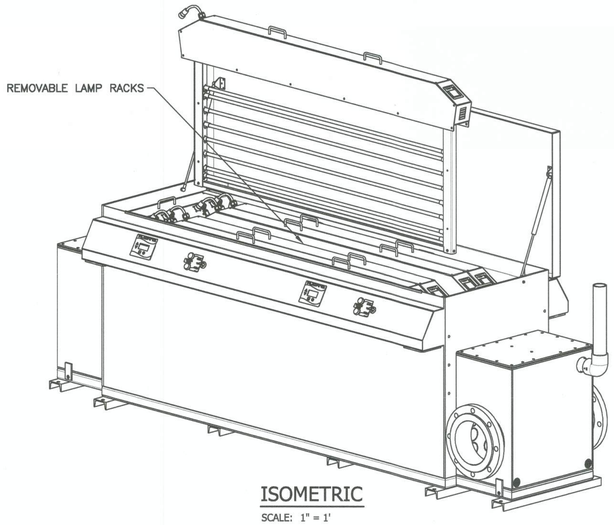

ISOMETRIC

SCALE: 1" = 1'

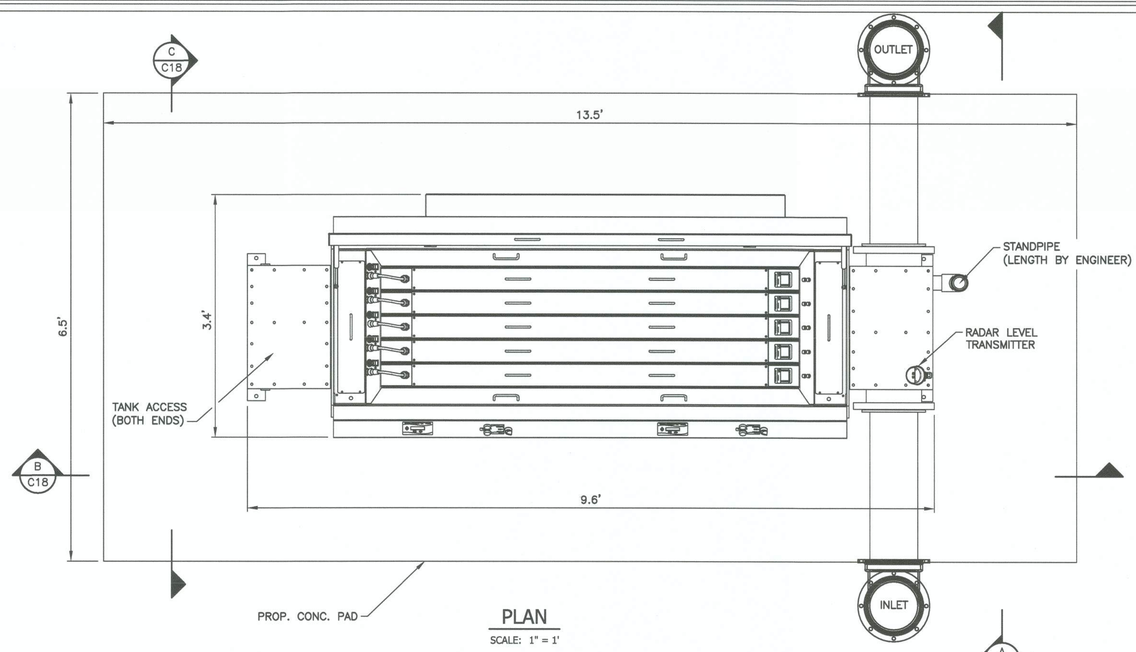

PLAN

SCALE: 1" = 1'

NOTES (UNLESS OTHERWISE SPECIFIED):

1. DRAWING IS IN ACCORDANCE WITH ASME Y14.5–2009.
2. ALL WETTED COMPONENTS OF STAINLESS STEEL, AFP, OR NON–CORROSIVE MATERIALS.

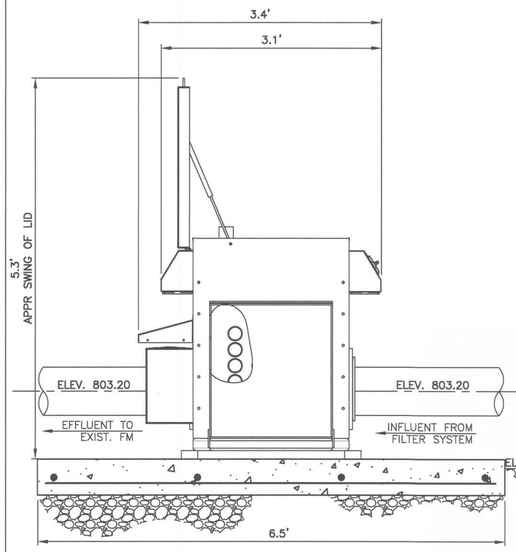

ELEVATION C-C

SCALE: 1" = 1'

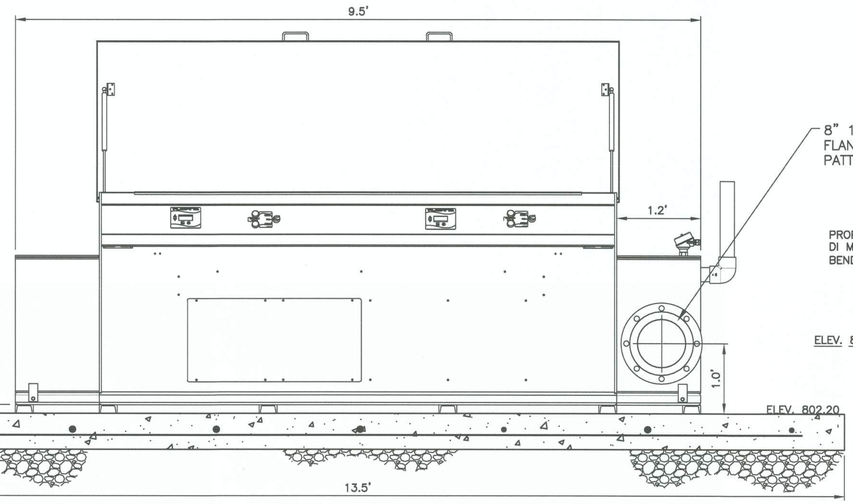

ELEVATION B-B

SCALE: 1" = 1'

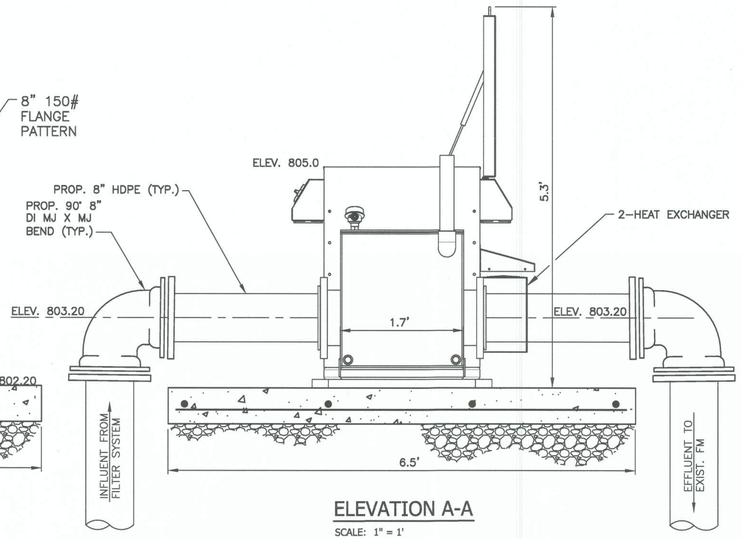

ELEVATION A-A

SCALE: 1" = 1'

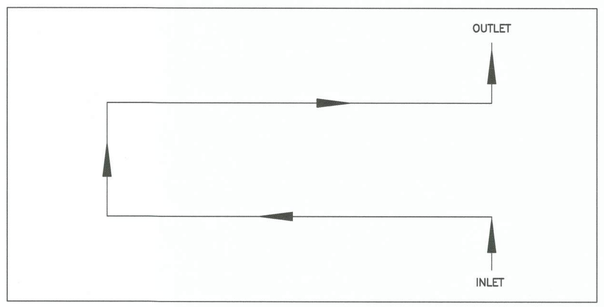

FLOW DIAGRAM

SCALE: 1" = 1'

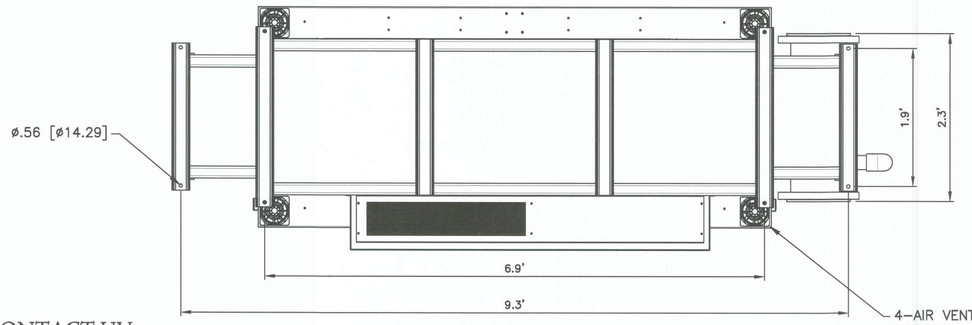

MOUNTING HOLE DIMENSIONS BOTTOM VIEW

SCALE: 1" = 1'

15 ENAQUA NON-CONTACT UV DISINFECTION SYSTEM DETAILS

SCALE: 1" = 1'

REVISIONS			
#	DESCRIPTION	DATE	BY
1			
2			
3			
4			
5			
6			

STANDARD DETAILS

WEDOWEE SEWER SYSTEM IMPROVEMENTS
WEDOWEE WATER, SEWER, & GAS BOARD
TOWN OF WEDOWEE
RANDOLPH COUNTY, ALABAMA

THE KELLEY GROUP
• A CIVIL ENGINEERING COMPANY •
850 Corporate Pwky, Suite 104 301 N Dickson St,
Birmingham, Alabama 35242 Tuscumbia, AL 35674

ATTENTION:
THIS BAR = 1 INCH ON ORIGINAL DRAWING. ADJUST SCALE IF THIS BAR ≠ 1 INCH.

1"

PROJECT NO: 20-0016
DRAWN BY: TCW
CHECKED BY: BWT
SCALE: AS NOTED
DATE: 08/2023

SHEET NO.
C18

ALABAMA LICENSED No. 29114 PROFESSIONAL ENGINEER BARTLEY W. TAFF
8-9-2023

R:\2020\20016 - WEDOWEE CWSRF #217.0 CAD\PRODUCTION PLAN\20016-D707.DWG

8/9/2023 2:23:57 PM

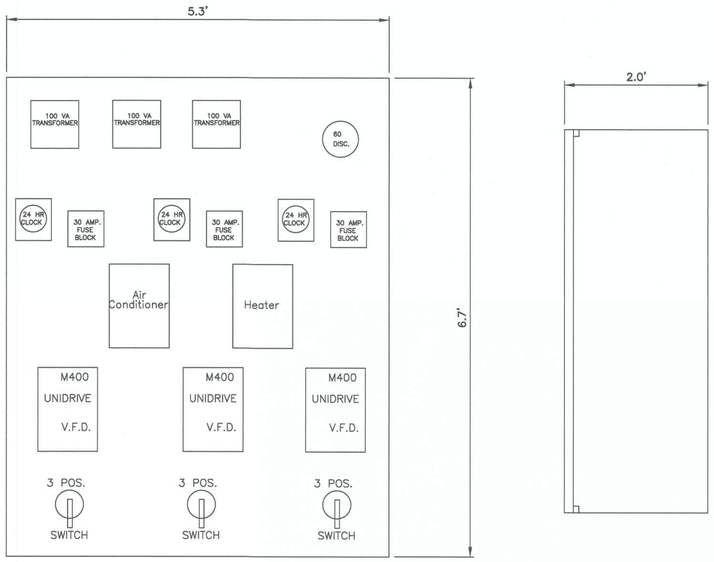

CONTROL PANEL LAYOUT

SCALE: N.T.S.

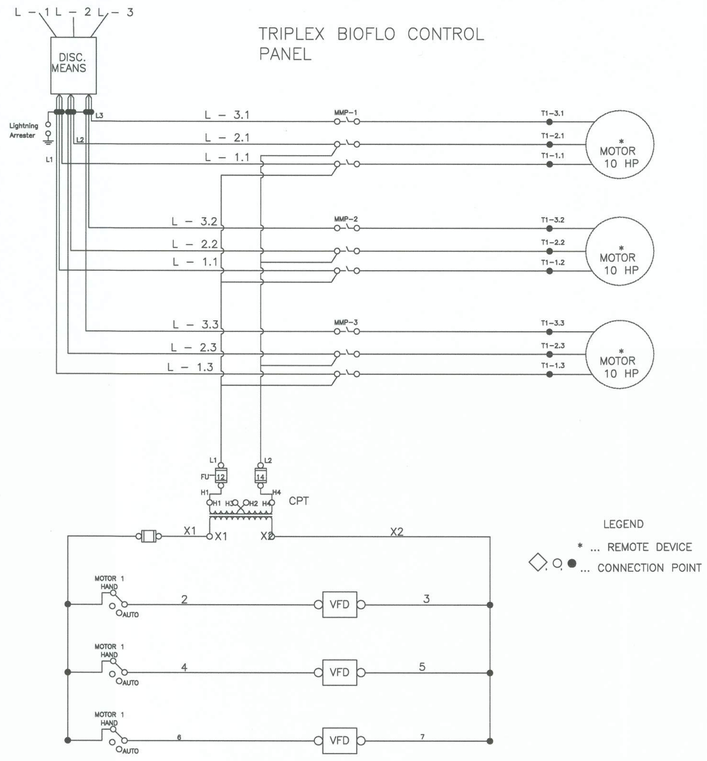

CONTROL PANEL WIRING SCHEMATIC

SCALE: N.T.S.

16 | 10HP TRIPLEX BIOFLOW PANEL & WIRING SCHEMATIC

SCALE: N.T.S.

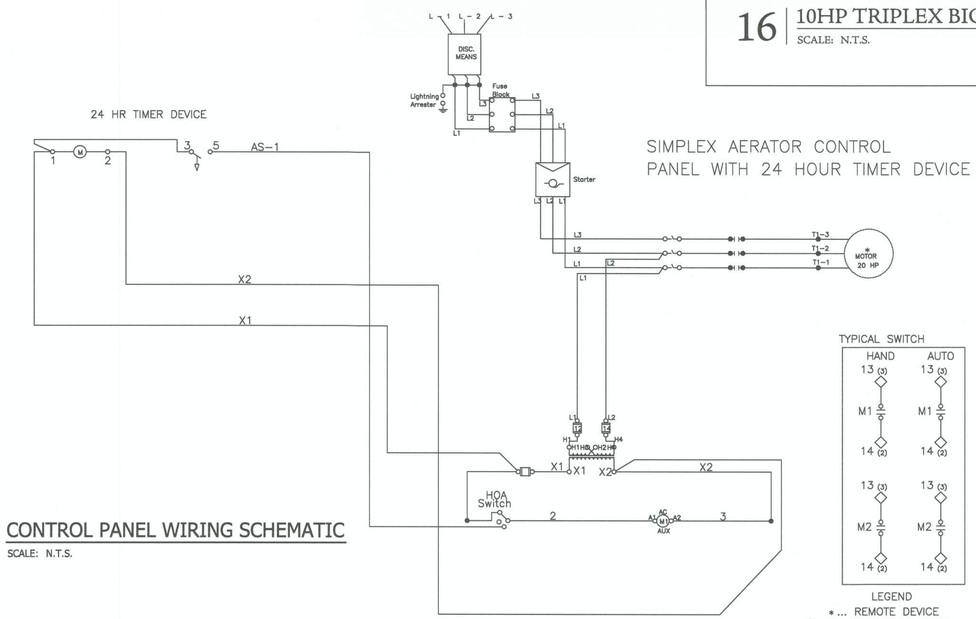

CONTROL PANEL WIRING SCHEMATIC

SCALE: N.T.S.

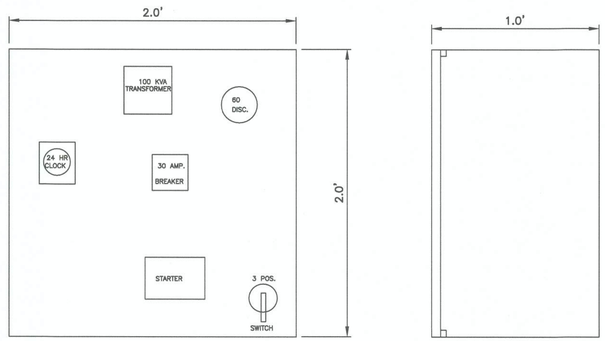

CONTROL PANEL LAYOUT

SCALE: N.T.S.

17 | 20HP SIMPLEX AERATOR PANEL & WIRING SCHEMATIC

SCALE: N.T.S.

REVISIONS			
#	DESCRIPTION	DATE	BY
1			
2			
3			
4			
5			
6			

STANDARD DETAILS

WEDOWEE SEWER SYSTEM IMPROVEMENTS
WEDOWEE WATER, SEWER, & GAS BOARD
TOWN OF WEDOWEE
RANDOLPH COUNTY, ALABAMA

THE KELLEY GROUP
• A CIVIL ENGINEERING COMPANY •
850 Corporate Pwky, Suite 104 301 N Dickson St,
Birmingham, Alabama 35242 Tuscumbia, AL 35674

ATTENTION:
THIS BAR = 1 INCH ON ORIGINAL DRAWING.
ADJUST SCALE IF THIS BAR ≠ 1 INCH.
1"

PROJECT NO: 20-0016
DRAWN BY: TCW
CHECKED BY: BWT
SCALE: AS NOTED
DATE: 08/2023

ALABAMA LICENSED No. 24914 PROFESSIONAL ENGINEER BARTLEY W. TATE
8-9-2023

SHEET NO.
C19

R:\2020\200016 - WEDOWEE CWSRF #217.0 CAD\PRODUCTION PLAN\200016-DT08.DWG

6/30/2023 3:29:02 PM

GENERAL ELECTRICAL LEGEND

DUPLEX — DOUBLE DUPLEX

WALL OUTLET – RECEPTACLE – 20A – 125V – 2P – 3W – GROUNDING – "GFI" TYPE – WEATHER RESISTANT – NEMA 5–20R – SINGLE PLATE.

OUTLET INSTALLATION DESIGNATIONS (APPLY TO ALL OUTLETS, DEVICES & EQUIPMENT):

- ES EQUIPMENT MOUNTED TO ALUMINUM SUPPORT FRAME. SEE DETAIL "E–ES".
- HR DEVICE SHALL BE HANDRAIL MOUNTED – SEE DETAIL "E–HR".
- SRS SUN/RAIN SHIELD. SEE DETAIL "E–SRS".
- VL VERIFY EXACT OUTLET LOCATION WITH OWNER PRIOR TO ROUGH–IN.
- W WEATHER PROOF – OUTLET SHALL BE INSTALLED WITH WEATHERPROOF, IN–USE, CAST COVER.

BRANCH/FEEDER CIRCUIT – CONCEALED IN WALLS OR CEILING.

BRANCH/FEEDER CIRCUIT – EXPOSED ON WALLS OR CEILING.

BRANCH/FEEDER CIRCUIT – CONCEALED IN FLOOR SLAB OR DIRT FILL.

BRANCH/FEEDER CIRCUIT – TO BE DEMOLISHED – MAY BE USED WITH OTHER LINE TYPES.

BRANCH/FEEDER CIRCUIT – HOMERUN – CAN BE USED WITH OTHER BRANCH/FEEDER TYPES.

BRANCH/FEEDER CIRCUIT MODIFIERS:

- ———— : 2#12 & 1#12G UNLESS NOTED OTHERWISE.
- ———//——— : 3#12 & 1#12G, ETC. UNLESS NOTED OTHERWISE (TICK MARKS INDICATE CONDUCTOR QUANTITY NOT INCLUDING GROUND WIRE).
- ——10—— : 2#10 & 1#10G UNLESS NOTED OTHERWISE (NUMBER INDICATES WIRE AWG).

SIZE CONDUIT PER N.E.C. UNLESS INDICATED OTHERWISE.

–OHP– OVERHEAD PRIMARY POWER SERVICE CABLING (WITH TELECOMMUNICATIONS CABLING WHERE APPLICABLE).

–OHS– OVERHEAD SECONDARY POWER SERVICE CABLING (WITH TELECOMMUNICATIONS CABLING WHERE APPLICABLE).

FLEXIBLE CONNECTION TO EQUIPMENT.

BRANCH CIRCUIT – RISER DOWN OR GENERAL CONDUIT STUB–OUT.

POWER DISTRIBUTION EQUIPMENT.

LIGHTING PANEL – SURFACE MOUNTED.

DISCONNECT SWITCH – INTEGRAL TO EQUIPMENT.

DISCONNECT SWITCH – NONFUSED.

DISCONNECT SWITCH – FUSED.

STARTER/CONTROL PANEL.

(M) MOTOR OUTLET – SIZE AS SHOWN.

GROUND CONNECTION.

DUCT BANK (NOT CONCRETE–ENCASED) – SEE DETAIL "E–DR".

VALVE ACTUATOR.

(FE) FLOW ELEMENT.

(PT) SUBMERSIBLE PRESSURE TRANSDUCER.

FIT FLOW INDICATING TRANSMITTER.

HT HEAT TRACING WITH INSULATION – SHALL BE PROVIDED ALONG FULL LENGTH(S) OF ALL SMALL DIAMETER PIPING IN INDICATED AREA UNLESS NOTED OTHERWISE – REFER TO CIVIL PLANS FOR PIPING LAYOUTS –VERIFY EXACT TERMINATION LOCATIONS(S) WITH SUPPLIER(S) PRIOR TO ROUGH–IN – REFER TO SPECIFICATION SECTION 26 44 00.

(A / E–1) DETAIL DESIGNATOR – "A" INDICATED DETAIL MARK – "E–1" INDICATED SHEET NUMBER WHERE DETAIL IS LOCATED (TYPICAL).

GENERAL ABBREVIATIONS:

- (EX) EXISTING TO REMAIN.
- (EX–R) EXISTING TO BE REMOVED – REMOVE ALL ASSOCIATED ELECTRICAL EQUIPMENT, DEVICES, CONDUIT AND WIRING CONNECTIONS TO OTHER ELECTRICAL ITEMS UNLESS SHOWN OTHERWISE.
- (EX–RL) EXISTING TO BE RELOCATED – REMOVE ALL ASSOCIATED ELECTRICAL EQUIPMENT, DEVICES, CONDUIT AND WIRING AT EXISTING LOCATION. RELOCATE ITEM TO NEW LOCATION SHOWN ON ELECTRICAL PLANS. EXTEND AND RECONNECT EXISTING CONDUIT, WIRING, ETC. TO NEW LOCATION AS REQUIRED UNLESS SHOWN OTHERWISE.
- (EX–RP) EXISTING TO BE REPLACED – EXTEND AND RECONNECT EXISTING CONDUIT AND WIRING TO REPLACED ITEM.

ELECTRICAL ABBREVIATIONS:

A	AMPERES.	NSV	NEW, SPARE OR VACATED.
AIC	AMPERES INTERRUPTING CAPACITY.	OC	ON CENTER.
AFF	ABOVE FINISHED FLOOR.	P	POLES.
AL	ALUMINUM.	PF	POWER FACTOR.
ATS	AUTOMATIC TRANSFER SWITCH.	ø	PHASE.
AWG	AMERICAN WIRE GAUGE.	PVC	POLYVINYL CHLORIDE.
C	CONDUIT.		
CU	COPPER.	SLD	SINGLE LINE DIAGRAM.
EC	EMPTY CONDUIT. OR ELECTRICAL CONTRACTOR	SS	STAINLESS STEEL.
		UL	UNDERWRITERS LABORATORY.
FPN	FUSE PER NAMEPLATE.	UNO	UNLESS NOTED OTHERWISE.
G	GROUND CONDUCTOR.	V	VOLTS.
KVA	KILOVOLT–AMPERES.	W	WIRES.
KW	KILOWATT.		
LV	LOW VOLTAGE.	CFCI	CONTRACTOR FURNISHED, CONTRACTOR INSTALLED.
MCM	THOUSAND CIRCULAR MILS.		
MV	MEDIUM VOLTAGE.	CFOI	CONTRACTOR FURNISHED, OWNER INSTALLED.
N	NEUTRAL.		
NEC	NATIONAL ELECTRICAL CODE.	OFOI	OWNER FURNISHED, CONTRACTOR INSTALLED.
NEMA	NATIONAL ELECTRICAL MANUFACTURER ASSOCIATION.	OFCI	OWNER FURNISHED, CONTRACTOR INSTALLED.
NIC	NOT IN CONTRACT.		

TYPICAL CIRCUITRY DESIGNATIONS:

2 SETS OF 4#3/0 & 1#3G – 2 1/2"C

- 2 SETS OF: QUANTITY OF PARALLEL SETS OF THE PHASE/NEUTRAL CONDUCTORS, GROUND CONDUCTOR AND CONDUIT SPECIFIED.
- 4#3/0: QUANTITY OF PHASE/NEUTRAL CONDUCTORS (PER SET).
- #3G: PHASE/NEUTRAL CONDUCTOR WIRE GAUGE.
- 1#3G: QUANTITY OF GROUND CONDUCTORS (PER SET)
- 2 1/2"C: GROUND CONDUCTOR WIRE GAUGE.
- CONDUIT SIZE.

MULTI–CONDUCTOR CONTROL 600V TRAY CABLE DESIGNATIONS:

(2) 4C#14 W/G – 1 1/4"C

- (2): QUANTITY OF MULTI–CONDUCTOR CABLES OF THE TYPE SPECIFIED WITHIN THE SPECIFIED CONDUIT.
- 4C: QUANTITY OF CONDUCTORS IN EACH CABLE SHEATH (NOT INCLUDING GROUND).
- #14: WIRE GAUGE.
- W/G: "W/G" = WITH ADDITIONAL INTEGRAL GROUND CONDUCTOR WITH GREEN INSULATION IN EACH CABLE SHEATH.
- 1 1/4"C: CONDUIT SIZE.

TWISTED, SHIELDED INSTRUMENTATION CABLE DESIGNATIONS:

(2) #16TSP – 1"C

- (2): QUANTITY OF INSTRUMENTATION CABLES IN THE SPECIFIED CONDUIT.
- #16: WIRE GAUGE.
- TSP: "TSP" = TWISTED SHIELDED PAIR.
- 1"C: CONDUIT SIZE.

GENERAL ELECTRICAL NOTES

1. SPECIAL ATTENTION IS CALLED TO THE FACT THAT THE REQUIRED WORK IS AT OPERATING FACILITIES, AND AS SUCH, NO UNNECESSARY SHUTDOWNS WILL BE ALLOWED. ANY NECESSARY SHUTDOWNS SHALL BE APPROVED IN WRITING BY THE PLANT MANAGER A MINIMUM OF TWO (2) WEEKS IN ADVANCE. TEMPORARY/PORTABLE PUMPING PROVISIONS (AND OTHER TEMPORARY PROVISIONS AS REQUIRED FOR OPERATION OF THE EXISTING SYSTEMS) SHALL BE PROVIDED BY THE CONTRACTOR IF OWNER–MANDATED MAXIMUM SHUTDOWN PERIODS ARE ANTICIPATED OR ARE POSSIBLE.
2. ELECTRICAL PLANS & DETAILS INDICATE TYPICAL WIRING REQUIREMENTS FOR PROCESS EQUIPMENT. VERIFY EXACT WIRING REQUIREMENTS & ALL DEVICE LOCATIONS WITH APPROVED MANUFACTURERS SHOP DRAWINGS PRIOR TO ROUGH–IN. NO ADDITIONAL COMPENSATION WILL BE PAID FOR MINOR CIRCUITRY ADJUSTMENTS REQUIRED TO COMPLY WITH MANUFACTURERS INSTALLATION DETAILS.
3. CONTRACTOR SHALL VERIFY ALL REQUIREMENTS FOR POWER SERVICE WITH UTILITY COMPANY PRIOR TO SUBMITTING BID. IF THEIR REQUIREMENTS ARE AT A VARIANCE WITH THOSE SHOWN ON PLANS THE CONTRACTOR SHALL INFORM ENGINEER IMMEDIATELY. ALL COSTS INCURRED WITH THE UTILITY COMPANY FOR SERVICE SHALL BE INCLUDED IN BID PRICE. IF SUCH COSTS ARE NOT AVAILABLE AT BID TIME CONTRACTOR SHALL INCLUDE WITH BID A LETTER FROM A RESPONSIBLE PARTY WITH THE UTILITY COMPANY STATING SUCH, AND COSTS WILL THEN BE EXCLUDED FROM THE BID PRICE.
4. CONTRACTOR SHALL VISIT THE SITE OF THE WORK PRIOR TO SUBMITTING BID TO EXAMINE CAREFULLY LOCAL CONDITIONS AND DIFFICULTIES TO BE ENCOUNTERED. ANY DISCREPANCY BETWEEN PLANS AND EXISTING CONDITIONS SHALL IMMEDIATELY BE CALLED TO THE ATTENTION OF THE ENGINEER.
5. ALL EQUIPMENT SHALL BE GROUNDED AND BONDED IN ACCORDANCE WITH NEC.
6. REMOVE ALL EXISTING ELECTRICAL EQUIPMENT AND WIRING MADE OBSOLETE BY THIS RENOVATION AND DISPOSE OF AS DIRECTED BY THE ENGINEER.
7. THIS CONTRACTOR SHALL FURNISH ALL MATERIALS AND LABOR NECESSARY TO EXTEND CIRCUITS AND MAKE RECONNECTIONS TO ANY ACTIVE ELECTRICAL DEVICES ON WHICH THE BRANCH CIRCUIT IS INTERRUPTED BY THIS ALTERATION. CARE SHALL BE TAKEN TO INSURE THAT EXISTING PANEL AND FEEDER RATINGS ARE NOT EXCEEDED.
8. WET OR PROCESS AREAS (FOR USE IN DETERMINING TYPES OF MATERIALS REQUIRED PER ELECTRICAL SPECIFICATIONS) SHALL BE DEFINED AS ALL AREAS WITHIN THE PROJECT SCOPE.
9. CONTRACTOR SHALL BE RESPONSIBLE FOR PROVIDING IDENTIFICATION/LABELING FOR ALL NEW INSTRUMENTS, UTILIZATION EQUIPMENT (PUMPS, AERATORS, ETC.), VALVE ACTUATORS, CONTROL DEVICES, CONTROL PANELS, STARTERS, POWER PANELS, ETC. (REGARDLESS OF WHICH ENTITY PROVIDES THE EQUIPMENT) PER DETAILED REQUIREMENTS OF SPECIFICATION SECTION 26 05 53.
10. FLOOD ELEVATION FOR THIS SITE IS 799.00'. ALL NEW ELECTRICAL EQUIPMENT, DEVICES & TERMINATIONS SHALL BE INSTALLED AT A MINIMUM ELEVATION OF 802.00' (12" ABOVE 801.00' ELECTRICAL DATUM PLANE ELEVATION PER N.E.C. ARTICLE 482), UNLESS SPECIFICALLY RATED FOR SUBMERGED APPLICATIONS.
11. ENTIRE ELECTRICAL INSTALLATION WITHIN HAZARDOUS AREAS AS DEFINED BY NFPA 820 SHALL COMPLY WITH ALL APPLICABLE NEC REQUIREMENTS FOR CONDUIT SEALS, RACEWAY TYPES, MATERIAL/DEVICE TYPES, ETC. PLANS DO NOT ATTEMPT TO INDICATE CODE–REQUIRED LOCATIONS OF EACH CONDUIT SEAL. CONDUIT SEALS SHALL BE PROVIDED AT EACH CONDUIT TERMINATION IN HAZARDOUS AREAS AND WHERE CONDUITS PASS FROM HAZARDOUS TO NON–HAZARDOUS AREAS PER CODE REQUIREMENTS. ALL DISCONNECT SWITCHES, RECEPTACLES, LIGHT SWITCHES, CONTROL STATIONS, J–BOXES, INSTRUMENTS, ETC. THROUGHOUT THIS AREA SHALL BE INSTALLED FULLY OUTSIDE HAZARDOUS (CLASSIFIED) LOCATIONS UNLESS SPECIFICATIONS SHOWN OTHERWISE. ALL CONDUITS PASSING THROUGH HAZARDOUS (CLASSIFIED) LOCATIONS (BUT NOT TERMINATING WITHIN HAZARDOUS LOCATIONS) SHALL BE UNBROKEN, WITH NO COUPLINGS, ETC. WITHIN THE HAZARDOUS AREA. REFER TO DETAILS "E–HALS" & "E–HAOC" FOR GENERAL DEFINITIONS OF HAZARDOUS AREAS.
12. ALL INDICATING TRANSMITTER DEVICES (FLOW TRANSMITTERS, LEVEL TRANSMITTERS, ETC.) LOCATED IN EXTERIOR ENVIRONMENTS SHALL BE INSTALLED WITHIN SUN/RAIN SHIELDS PER DETAIL "E–SRS". CONTRACTOR SHALL PROVIDE SUN/RAIN SHIELDS (INCLUDING INSTRUMENTS FURNISHED BY EQUIPMENT SUPPLIERS). CONTRACTOR SHALL COORDINATE WITH INSTRUMENT SUPPLIER(S) PRIOR TO SUBMITTAL OF SHOP DRAWINGS.
13. CONTRACTOR SHALL BE RESPONSIBLE FOR PROVIDING 120V AND ANALOG SURGE PROTECTION DEVICES AT ALL INSTRUMENTS LOCATED IN EXTERIOR ENVIRONMENTS. CONTRACTOR SHALL COORDINATE WITH INSTRUMENT SUPPLIER(S) PRIOR TO SUBMITTAL OF SHOP DRAWINGS.
    - A. SURGE PROTECTION DEVICES AT 2–WIRE INSTRUMENTS SHALL BE DEHN DEHNPIPE SERIES (IP67 STAINLESS STEEL DEVICE WITH 10kA TOTAL NOMINAL DISCHARGE CURRENT PER LINE) (NO EQUAL ALLOWED).
    - B. SURGE PROTECTION DEVICES AT 4–WIRE INSTRUMENTS SHALL BE DEHN BLITZDUCTOR XT SERIES (FOR THE ANALOG SIGNAL) PLUS DEHNGUARD SERIES (FOR THE POWER INPUT) COMBINED INTO ONE OVERALL NEMA 4X ENCLOSURE WITH VIEWING WINDOW PER SPEC SECTION 27 60 05 REQUIREMENTS. SPD'S SHALL BE 10kA DISCHARGE CURRENT PER LINE FOR ANALOG, 15kA DISCHARGE CURRENT PER LINE FOR 120V POWER).

ADDITIVE ALTERNATE BID ITEMS SUMMARY

1. ADDITIVE ALTERNATE BID ITEM NO. 1: PROVIDE STANDBY GENERATOR, ATS, GENERATRO CONTROL WIRING, ETC. AT INFLUENT PUMP STATION AREA AS SHOWN ON SHEETS E2, E3, E11, E20, & E32.

REVISIONS			
#	DESCRIPTION	DATE	BY
1			
2			
3			
4			
5			
6			

ELECTRICAL LEGEND AND NOTES
WEDOWEE SEWER SYSTEM IMPROVEMENTS
WEDOWEE WATER, SEWER, & GAS BOARD
TOWN OF WEDOWEE
RANDOLPH COUNTY, ALABAMA

THE KELLEY GROUP
• A CIVIL ENGINEERING COMPANY •
850 Corporate Pwky, Suite 104 Birmingham, Alabama 35242
301 N Dickson St, Tuscumbia, AL 35674

ATTENTION:
THIS BAR = 1 INCH ON ORIGINAL DRAWING. ADJUST SCALE IF THIS BAR ≠ 1 INCH.

1"

PROJECT NO: 20-0016
DRAWN BY: ZJG
CHECKED BY: PDB
SCALE: AS NOTED
DATE: 6/30/2023

SHEET NO.
E1

ALABAMA LICENSED No. 27420 PROFESSIONAL ENGINEER PHILIP D. BLACK
6/30/2023

JACKSON, RENFRO & ASSOCIATES, INC.
ELECTRICAL ENGINEERING & DESIGN
31 INVERNESS CENTER PKWY • SUITE 300 • BIRMINGHAM, AL • 35242
PHILIP D. BLACK, PE
phil@jraee.com
(O) 205.536.7120
(F) 205.995.1078
JRA JOB NO. 223096

Z:\CAD\DWG\223096\E1 (GEL.GEN).DWG

6/30/2023 3:29:09 PM

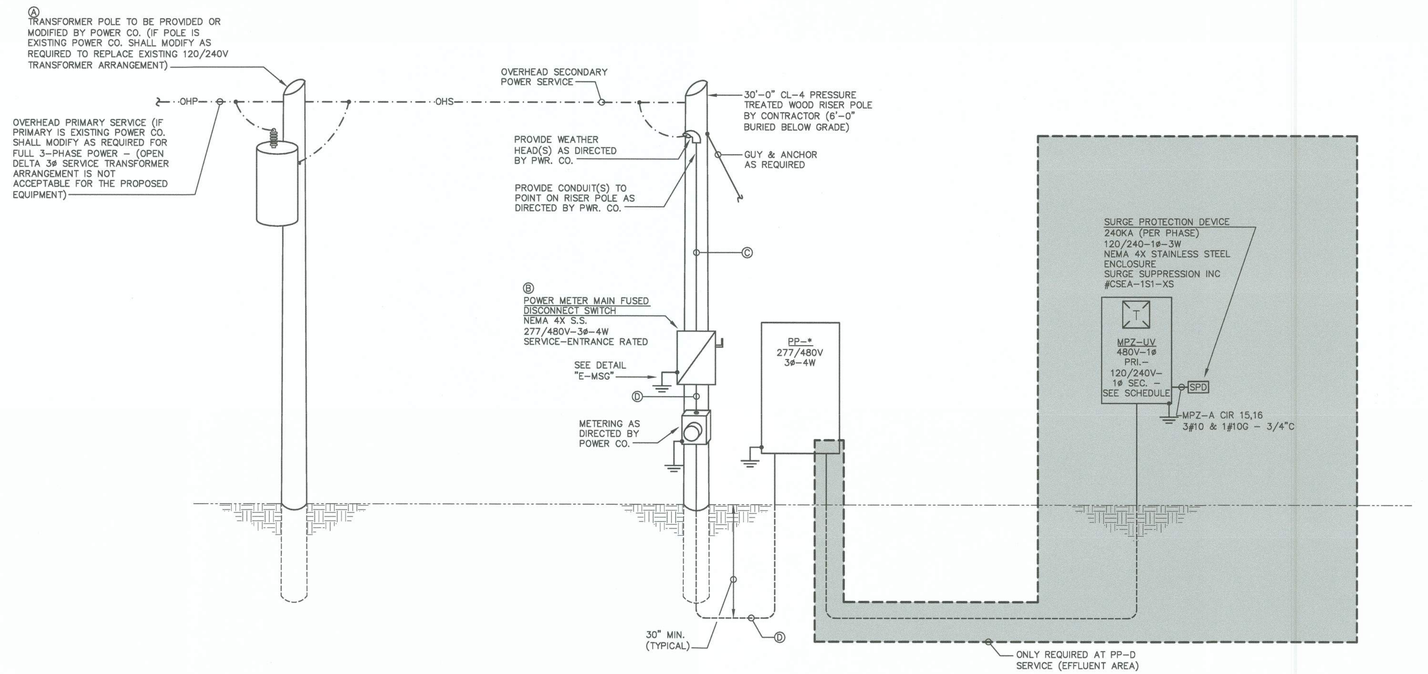

TYPICAL SINGLE LINE DIAGRAM (BASE BID)

SCALE : NONE

SINGLE LINE DIAGRAM SCHEDULE						
POWER PANEL SERVED	Ⓐ SERVICE VOLTAGE	Ⓑ POWER METER MAIN FUSED DISCONNECT SWITCH			FEEDER CIRCUITRY	
		(AMPS/POLES)	(INT. RATING)	(FUSE SIZE/TYPE)	Ⓒ SERVICE CONDUCTORS	Ⓓ FEEDER CONDUCTORS
PP-A	277/480V-3P-4W	200/3	22KAIC	200A/RK1	4#3/0 - 2 1/2"C	4#3/0 & 1#6G - 2 1/2"C
PP-B	277/480V-3P-4W	200/3	22KAIC	200A/RK1	4#3/0 - 2 1/2"C	4#3/0 & 1#6G - 2 1/2"C
PP-C	277/480V-3P-4W	200/3	22KAIC	200A/RK1	4#3/0 - 2 1/2"C	4#3/0 & 1#6G - 2 1/2"C
PP-D	277/480V-3P-4W	400/3	22KAIC	300A/RK1	4-350MCM - 3 1/2"C	4-350MCM & 1#4G - 3 1/2"C

THIS SCHEDULE SHALL APPLY TO BASE BID AND ADDITIVE ALTERNATE NO. 1

TYPICAL SINGLE LINE DIAGRAM NOTES

1. REFER TO PANELBOARD, TRANSFORMERS, AND SINGLE LINE DIAGRAM SCHEDULE FOR ALL APPLICABLE FEEDER SIZES, BREAKER RATINGS, BUS RATINGS, TRANSFORMER RATINGS, ETC. NOT SHOWN ON THIS DIAGRAM.
2. NEUTRAL-GROUND BONDS SHALL ONLY BE MADE AT THE FOLLOWING LOCATIONS:
   A. MAIN FUSED DISCONNECT SWITCHES.
   B. SECONDARY SIDES OF ALL TRANSFORMERS.
3. THIS DIAGRAM IS TYPICAL OF FOUR (4) SERVICES. THE DESIGNATION "*" IN THE DIAGRAM ABOVE REPRESENTS THE FOLLOWING:
   A. INFLUENT AREA: "A" (BASE BID)
   B. FLOATING AERATORS NO. 3-5 AREA: "B"
   C. FLOATING AERATORS NO. 6-9 AREA: "C"
   D. EFFLUENT AREA: "D"

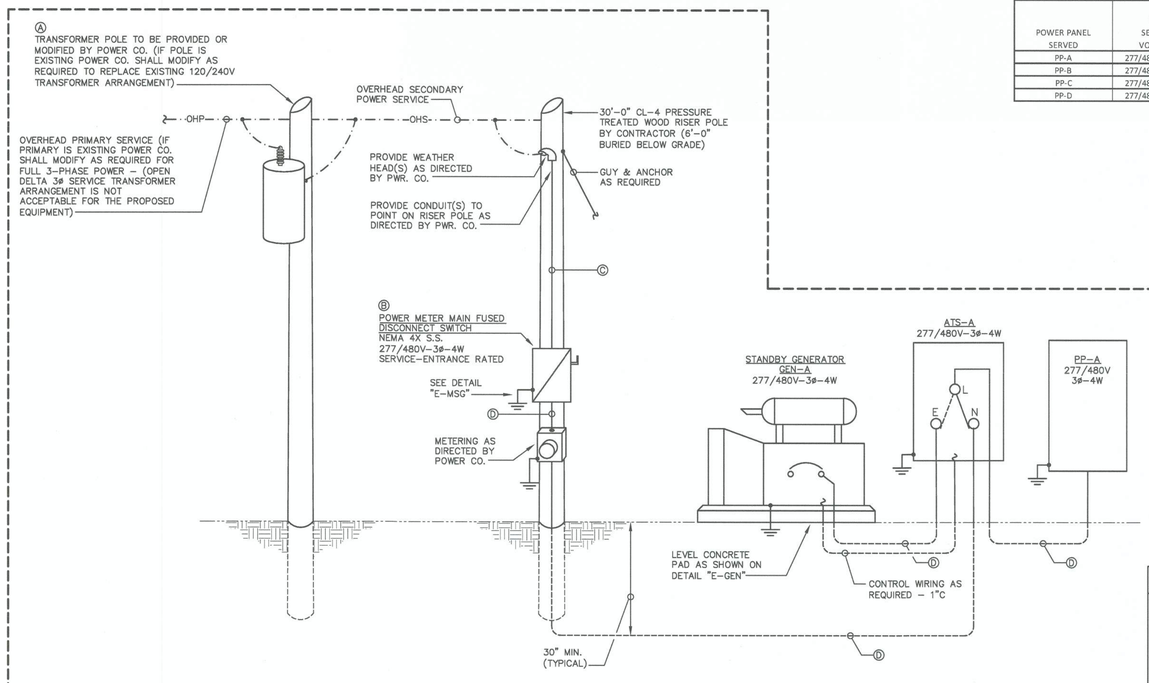

INFLUENT PUMP STATION AREA SINGLE LINE DIAGRAM (ADDITIVE ALTERNATE NO. 1)

SCALE : NONE

ADDITIVE ALTERNATE SINGLE LINE DIAGRAM NOTES

1. REFER TO PANELBOARD, GENERATOR, ATS, TRANSFORMERS, AND SINGLE LINE DIAGRAM SCHEDULE FOR ALL APPLICABLE FEEDER SIZES, BREAKER RATINGS, BUS RATINGS, TRANSFORMER RATINGS, ETC. NOT SHOWN ON THIS DIAGRAM.
2. NEUTRAL-GROUND BONDS SHALL ONLY BE MADE AT THE FOLLOWING LOCATIONS:
   A. MAIN FUSED DISCONNECT SWITCH.
3. THIS DIAGRAM INCLUDES THE GENERATOR/ATS/ETC. ADDED WITHIN ADDITIVE ALTERNATE NO. 1. SEE ADDITIVE ALTERNATE SUMMARY NOTE 1 ON SHEET E1.

REVISIONS			
#	DESCRIPTION	DATE	BY
2			
3			
4			
5			
6			

TYPICAL SINGLE LINE DIAGRAM
WEDOWEE SEWER SYSTEM IMPROVEMENTS
WEDOWEE WATER, SEWER, & GAS BOARD
TOWN OF WEDOWEE
RANDOLPH COUNTY, ALABAMA

THE KELLEY GROUP
- A CIVIL ENGINEERING COMPANY -
850 Corporate Pwky, Suite 104 Birmingham, Alabama 35242
301 N Dickson St, Tuscumbia, AL 35674

ATTENTION:
THIS BAR = 1 INCH ON ORIGINAL DRAWING. ADJUST SCALE IF THIS BAR ≠ 1 INCH.
1"

PROJECT NO: 20-0016
DRAWN BY: ZJG
CHECKED BY: PDB
SCALE: AS NOTED
DATE: 6/30/2023

SHEET NO.
E2

ALABAMA LICENSED No. 27420 PROFESSIONAL ENGINEER PHILIP D. BLACK
6/30/2023

JACKSON, RENFRO & ASSOCIATES, INC.
ELECTRICAL ENGINEERING & DESIGN
31 INVERNESS CENTER PKWY • SUITE 300 • BIRMINGHAM, AL • 35242
PHILIP D. BLACK, PE
phil@jraee.com
(D) 205.536.7120
(P) 205.995.1078
JRA JOB NO. 223096

Z:\CAD\DWG\223096\E2 (SLD).DWG

6/30/2023 3:29:34 PM

GENERATOR SCHEDULE - GEN-A

KW RATING:	150KW (MINIMUM)	SKVA RATING (AT 35%V. DIP):	
VOLTAGE:	277/480V-3P-4W	SOUND ATTENUATION:	CRITICAL SILENCER
FUEL TYPE:	DIESEL	LOCATION:	SERVICE POINT A (INFLUENT P.S.)

CIR. NO.	DESCRIPTION	VOLTS	P	HP	KW OR KVA	AMPS	BKR SIZE	SWITCH SIZE: SWITCH AMPS	SWITCH SIZE: F-TRON AMPS	WIRE AND COND. SIZE
1	ATS-A (E)	277/480	3		83.0		200/3			SEE SINGLE LINE DIAGRAM

TOTAL CONNECTED LOAD:	83.0 KVA	103.7 AMPS
TOTAL DEMAND LOAD:	83.0 KVA	103.7 AMPS
TOTAL COMPUTED LOAD:	83.0 KVA	103.7 AMPS

NOTES:
1. THE GENERATOR SUPPLIER SHALL SUBMIT A SIZING REPORT SHOWING THAT THE MAXIMUM GENERATOR VOLTAGE DIP WILL BE LESS THAN 20% & FREQUENCY DIP LESS THAN 10% WITH THE LOAD(S) SEPERATED INTO THREE (3) STEPS AS FOLLOWS:
   STEP 1 - 5KVA MISCELLANEOUS SINGLE-PHASE LINEAR LOAD, ONE (1) 2HP - 3PHASE MOTOR, AND TWO (2) 20HP - 3PHASE, AERATOR MOTORS WITH ACROSS-THE-LINE-STARTER.
   STEP 2 - ONE (1) 15HP - 3-PHASE PUMP MOTOR WITH VFD.
   STEP 3 - ONE (1) 15HP - 3-PHASE PUMP MOTOR WITH VFD.
2. CONTRACTOR SHALL CONFIRM THE EXACT STARTER TYPES AND MOTOR CHARACTERISTICS PRIOR TO SUBMITTING SHOP DRAWINGS.

AUTOMATIC TRANSFER SWITCH SCHEDULE - ATS-A

KAIC / WCR RATING:	22KAIC (MINIMUM)	NORMAL FED FROM:	MAIN DISCONNECT - A
VOLTAGE:	277/480V-3P-4W	NORMAL FEEDER:	SEE SINGLE LINE DIAGRAM
AMP RATING:	200 AMP	EMERGENCY FED FROM:	GEN-A
LOCATION:	SERVICE POINT A (INFLUENT P.S.)	EMEGENCY FEEDER:	SEE SINGLE LINE DIAGRAM

LOAD SIDE FEEDER DESCRIPTION	VOLTS	P	HP	KW OR KVA	AMPS	WIRE AND COND. SIZE
PP-A	277/480	3		83.0		SEE SINGLE LINE DIAGRAM

EMERGENCY		NORMAL
83.0 KVA	TOTAL CONNECTED LOAD:	83.0 KVA
103.7 AMPS		103.7 AMPS
83.0 KVA	TOTAL DEMAND LOAD:	83.0 KVA
103.7 AMPS		103.7 AMPS
83.0 KVA	TOTAL COMPUTED LOAD:	83.0 KVA
103.7 AMPS		103.7 AMPS

NOTES:
1. ENCLOSURE SHALL BE NEMA 4X S.S.

THIS WORK IS PART OF ADDITIVE ALTERNATE NO. 1. SEE ADDITIVE ALTERNATE SUMMARY NOTE 1 ON SHEET E1.

PANELBOARD SCHEDULE - PP-A

PANEL TYPE:	SQUARE 'D' TYPE NF	AIC RATING:	22KAIC (MINIMUM)
VOLTAGE	277/480V-3P-4W	MOUNTING:	SURFACE
AMPS & TYPE:	200/3 MAIN BKR	LOCATION:	SERVICE POINT A (INFLUENT PUMP STATION)
FED FROM:	MAIN FUSED DISCONNECT SWITCH / ATS-A	FEEDER:	SEE SINGLE LINE DIAGRAM

CKT. NO.	NOTES	BKR	DESCRIPTION	WATTS	PHASE	WATTS	DESCRIPTION	BKR	NOTES	CKT NO.
1	LOFF	100/3	INFLUENT PUMP STATION C.P.	12,333	A	7,200	FLOATING AERATOR NO. 2 C.P.	60/3	LOFF	10
2	|	|	|	12,333	B	7,200	|	|	|	11
3	|	|	|	12,333	C	7,200	|	|	|	12
4	LOFF	30/3	RAPTOR MICRO STRAINER C.P.	933	A		SPARE	60/3	LOFF	13
5	|	|	|	933	B		|	|	|	14
6	|	|	|	933	C		|	|	|	15
7	LOFF	60/3	FLOATING AERATOR NO. 1 C.P.	7,200	A		SPARE	30/3	LOFF	16
8	|	|	|	7,200	B		|	|	|	17
9	|	|	|	7,200	C		|	|	|	18

NOTES:	PH. A:	PH. B:	PH. C:		
1. PROVIDE INTEGRAL 240KA (PER PHASE) SURGE PROTECTION DEVICE.	27,666	27,666	27,666	TOTAL CONNECTED LOAD:	83.0 KVA
					103.7 AMPS
2. ENCLOSURE SHALL BE NEMA 4X STAINLESS STEEL.				TOTAL DEMAND LOAD:	83.0 KVA
					103.7 AMPS
				TOTAL COMPUTED LOAD:	83.0 KVA
					103.7 AMPS

PANELBOARD SCHEDULE - PP-B

PANEL TYPE:	SQUARE 'D' TYPE NF	AIC RATING:	22KAIC (MINIMUM)
VOLTAGE	277/480V-3P-4W	MOUNTING:	SURFACE
AMPS & TYPE:	200/3 MAIN BKR	LOCATION:	SERVICE POINT B (AERATORS 3-5)
FED FROM:	MAIN FUSED DISCONNECT SWITCH	FEEDER:	SEE SINGLE LINE DIAGRAM

CKT. NO.	NOTES	BKR	DESCRIPTION	WATTS	PHASE	WATTS	DESCRIPTION	BKR	NOTES	CKT NO.
1	LOFF	60/3	FLOATING AERATOR NO. 3 C.P.	7,200	A		SPARE	60/3	LOFF	10
2	|	|	|	7,200	B		|	|	|	11
3	|	|	|	7,200	C		|	|	|	12
4	LOFF	60/3	FLOATING AERATOR NO. 4 C.P.	7,200	A			-/1	-	13
5	|	|	|	7,200	B			-/1	-	14
6	|	|	|	7,200	C			-/1	-	15
7	LOFF	60/3	FLOATING AERATOR NO. 5 C.P.	7,200	A			-/1	-	16
8	|	|	|	7,200	B			-/1	-	17
9	|	|	|	7,200	C			-/1	-	18

NOTES:	PH. A:	PH. B:	PH. C:		
1. PROVIDE INTEGRAL 240KA (PER PHASE) SURGE PROTECTION DEVICE.	21,600	21,600	21,600	TOTAL CONNECTED LOAD:	64.8 KVA
					81.0 AMPS
2. ENCLOSURE SHALL BE NEMA 4X STAINLESS STEEL.				TOTAL DEMAND LOAD:	64.8 KVA
					81.0 AMPS
				TOTAL COMPUTED LOAD:	64.8 KVA
					81.0 AMPS

PANELBOARD SCHEDULE - MPZ-UV

PANEL TYPE:	SQUARE 'D' MINI POWER ZONE	AIC RATING:	10KAIC (MINIMUM)
VOLTAGE	120/240V-1P-3W	MOUNTING:	SURFACE
AMPS & TYPE:	SEE BELOW	LOCATION:	UV SYSTEM
FED FROM:	PP-D	FEEDER:	SEE PP-D SCHEDULE

CKT. NO.	NOTES	BKR	DESCRIPTION	WATTS	PHASE	WATTS	DESCRIPTION	BKR	NOTES	CKT NO.
1	-	20/1	UV POWER DISCONNECT PANEL	1,000	A			-/1	-	10
2	-	20/1	UV SYSTEM CONTROL PANEL	1,000	B			-/1	-	11
3	-	20/1	UV SYSTEM EQ. STAND RECEPT.	200	A			-/1	-	12
4	-	20/1	FILTER PLATFORM RECEPT.	200	B			-/1	-	13
5	-	20/1	SPARE		A			-/1	-	14
6	-	20/1	SPARE		B		SURGE PROTECTION DEVICE	30/2	-	15
7	-	20/1	SPARE		A		|	|	-	16
8	-	20/1	SPARE		B		MAIN BREAKER	60/2	MAIN	17
9	-	20/1	SPARE		A		|	|	MAIN	18

NOTES:	PH. A:	PH. B:			
1. ENCLOSURE SHALL BE NEMA 3R STAINLESS STEEL.	1,200	1,200		TOTAL CONNECTED LOAD:	2.4 KVA
					10.4 AMPS
2. MPZ SHALL HAVE INTEGRAL 10 KVA TRANSFORMER, 30A/2P PRIMARY MAIN BKR, 60A/2P SECONDARY MAIN BKR, AND SHALL BE CONFIGURED FOR 480V-1P-2W INPUT.				TOTAL DEMAND LOAD:	2.4 KVA
					10.4 AMPS
				TOTAL COMPUTED LOAD:	2.4 KVA
					10.4 AMPS

PANELBOARD SCHEDULE - PP-D

PANEL TYPE:	SQUARE 'D' TYPE NF	AIC RATING:	22KAIC (MINIMUM)
VOLTAGE	277/480V-3P-4W	MOUNTING:	SURFACE
AMPS & TYPE:	300/3 MAIN BKR	LOCATION:	SERVICE POINT D (EFFLUENT PUMP STATION)
FED FROM:	MAIN FUSED DISCONNECT SWITCH	FEEDER:	SEE SINGLE LINE DIAGRAM

CKT. NO.	NOTES	BKR	DESCRIPTION	WATTS	PHASE	WATTS	DESCRIPTION	BKR	NOTES	CKT NO.
1	LOFF	100/3	NITRIFICATION ROTOR NO. 1-3 C.P.	12,333	A	1,966	UV POWER DISCONNECT PANEL	20/3	' ' ' '	13
2	|	|	|	12,333	B	1,966	|	|	|	14
3	|	|	|	12,333	C	1,966	|	|	|	15
4	LOFF	100/3	NITRIFICATION ROTOR NO. 4-6 C.P.	12,333	A		SPARE	30/3	LOFF	16
5	|	|	|	12,333	B		|	|	|	17
6	|	|	|	12,333	C		|	|	|	18
7	LOFF	60/3	EFFLUENT PUMP STATION C.P.	8,866	A			-/1	-	19
8	|	|	|	8,866	B			-/1	-	20
9	|	|	|	8,866	C			-/1	-	21
10	VC	30/3	FILTER SYSTEM CONTROL PANEL	2,933	A			-/1	-	22
11	|	|	|	2,933	B	1,200	MPZ-UV (10 KVA X-FORMER)	30/2	-	23
12	|	|	|	2,933	C	1,200	2#10 & 1#10G - 3/4"C	|	-	24

NOTES:	PH. A:	PH. B:	PH. C:		
1. PROVIDE INTEGRAL 240KA (PER PHASE) SURGE PROTECTION DEVICE.	38,431	39,631	39,631	TOTAL CONNECTED LOAD:	117.7 KVA
					147.1 AMPS
2. ENCLOSURE SHALL BE NEMA 4X STAINLESS STEEL.				TOTAL DEMAND LOAD:	117.7 KVA
					147.1 AMPS
				TOTAL COMPUTED LOAD:	117.7 KVA
					147.1 AMPS

TRANSFORMER SCHEDULE

MARK	SIZE (KVA)	DESCRIPTION	PRIMARY VOLTAGE & PHASE	SECONDARY VOLTAGE & PHASE	PANEL FED	MOUNTING	GROUND SIZE	REMARKS
T-UV	10	DRY-TYPE	480V-1P-2W	120/240V-1P-3W	MPZ-UV	WITHIN MPZ-UV	INTEGRAL	

TRANSFORMER SCHEDULE NOTES:
1. EXACT TRANSFORMER LOCATIONS SHALL BE FIELD COORDINATED TO PROVIDE CODE-REQUIRED CLEARANCES AND WORKING SPACES AROUND TRANSFORMERS AND ADJACENT EQUIPMENT (SUCH AS PANELBOARDS).
2. ALL TRANSFORMERS SHALL BE MOUNTED ON VIBRATION ISOLATORS PER SPECIFICATION REQUIREMENTS.

PANELBOARD/EQUIPMENT SCHEDULE(S) KEYED NOTES LEGEND

KEYED NOTE	DESCRIPTION
LOFF	INDICATED BREAKER SHALL BE PROVIDED WITH LOCK-OFF HARDWARE.
VC	CONTRACTOR SHALL VERIFY REQUIRED BREAKER & CIRCUITRY REQUIREMENTS OF INDICATED CIRCUIT WITH EQUIPMENT SUPPLIER PRIOR TO SUBMITTING SHOP DRAWINGS OR ROUGHING IN CONDUITS.

PANELBOARD SCHEDULE - PP-C

PANEL TYPE:	SQUARE 'D' TYPE NF	AIC RATING:	22KAIC (MINIMUM)
VOLTAGE	277/480V-3P-4W	MOUNTING:	SURFACE
AMPS & TYPE:	200/3 MAIN BKR	LOCATION:	SERVICE POINT C (AERATORS 6-8)
FED FROM:	MAIN FUSED DISCONNECT SWITCH	FEEDER:	SEE SINGLE LINE DIAGRAM

CKT. NO.	NOTES	BKR	DESCRIPTION	WATTS	PHASE	WATTS	DESCRIPTION	BKR	NOTES	CKT NO.
1	LOFF	60/3	FLOATING AERATOR NO. 6 C.P.	7,200	A		SPARE	60/3	LOFF	10
2	|	|	|	7,200	B		|	|	|	11
3	|	|	|	7,200	C		|	|	|	12
4	LOFF	60/3	FLOATING AERATOR NO. 7 C.P.	7,200	A			-/1	-	13
5	|	|	|	7,200	B			-/1	-	14
6	|	|	|	7,200	C			-/1	-	15
7	LOFF	60/3	FLOATING AERATOR NO. 8 C.P.	7,200	A			-/1	-	16
8	|	|	|	7,200	B			-/1	-	17
9	|	|	|	7,200	C			-/1	-	18

NOTES:	PH. A:	PH. B:	PH. C:		
1. PROVIDE INTEGRAL 240KA (PER PHASE) SURGE PROTECTION DEVICE.	21,600	21,600	21,600	TOTAL CONNECTED LOAD:	64.8 KVA
					81.0 AMPS
2. ENCLOSURE SHALL BE NEMA 4X STAINLESS STEEL.				TOTAL DEMAND LOAD:	64.8 KVA
					81.0 AMPS
				TOTAL COMPUTED LOAD:	64.8 KVA
					81.0 AMPS

ELECTRICAL SCHEDULE LEGEND

GEN-A	PP-A	PP-D
ATS-A	PP-B	MPZ-UV
	XFMRS	PP-C
	SCHEDULE NOTES	

ALABAMA LICENSED No. 27420 PROFESSIONAL ENGINEER PHILIP D. BLACK
6/30/2023

JACKSON, RENFRO & ASSOCIATES, INC.
ELECTRICAL ENGINEERING & DESIGN
31 INVERNESS CENTER PKWY • SUITE 300 • BIRMINGHAM, AL • 35242
PHILIP D. BLACK, PE
phil@jraee.com
(D) 205.536.7120
(P) 205.995.1078
JRA JOB NO. 223096

REVISIONS

#	DESCRIPTION	DATE	BY
1			
2			
3			
4			
5			
6			

ELECTRICAL SCHEDULES
WEDOWEE SEWER SYSTEM IMPROVEMENTS
WEDOWEE WATER, SEWER, & GAS BOARD
TOWN OF WEDOWEE
RANDOLPH COUNTY, ALABAMA

THE KELLEY GROUP
• A CIVIL ENGINEERING COMPANY •
850 Corporate Pwky, Suite 104 Birmingham, Alabama 35242
301 N Dickson St, Tuscumbia, AL 35674

ATTENTION:
THIS BAR = 1 INCH ON ORIGINAL DRAWING. ADJUST SCALE IF THIS BAR ≠ 1 INCH.
1"

PROJECT NO: 20-0016
DRAWN BY: ZJG
CHECKED BY: PDB
SCALE: AS NOTED
DATE: 6/30/2023

SHEET NO.
E3

Z:\CAD\DWG\223096\E3 (SCHED).DWG

6/30/2023 3:29:42 PM

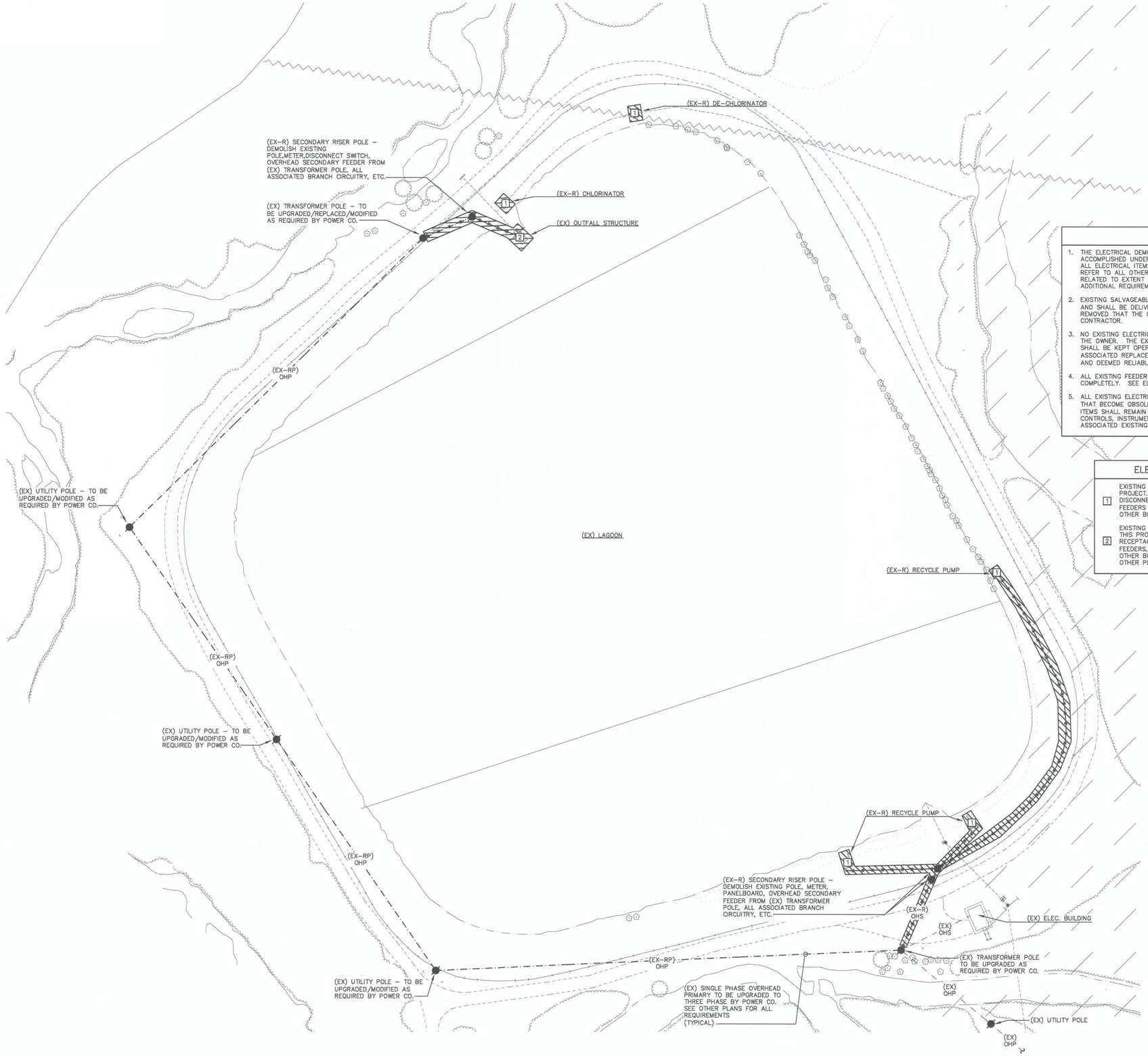

ELECTRICAL DEMOLITION NOTES

1. THE ELECTRICAL DEMOLITION PLANS INDICATE GENERAL SCOPE OF DEMOLITION WORK TO BE ACCOMPLISHED UNDER THIS CONTRACT. IT IS NOT THE INTENT OF THESE PLANS TO DETAIL ALL ELECTRICAL ITEMS THAT MUST BE REMOVED. THE ELECTRICAL CONTRACTOR SHALL REFER TO ALL OTHER PLANS IN THIS SET OF DRAWINGS FOR ADDITIONAL INFORMATION RELATED TO EXTENT AND SCOPE OF DEMOLITION WORK. REFER TO SPECIFICATIONS FOR ADDITIONAL REQUIREMENTS. VERIFY ALL REQUIREMENTS AT JOB SITE PRIOR TO BID.
2. EXISTING SALVAGEABLE MATERIALS REMOVED SHALL REMAIN THE PROPERTY OF THE OWNER AND SHALL BE DELIVERED TO OWNER'S DESIGNATED STORAGE FACILITY. ANY MATERIALS REMOVED THAT THE OWNER DOES NOT WISH TO RETAIN SHALL BE DISPOSED OF BY THE CONTRACTOR.
3. NO EXISTING ELECTRICAL ITEMS SHALL BE REMOVED WITHOUT PRIOR WRITTEN CONSENT OF THE OWNER. THE EXISTING PLANT RWPS, GAC FILTER SYSTEM, MAINTENANCE BUILDING, ETC. SHALL BE KEPT OPERATIONAL THROUGHOUT THE CONSTRUCTION PROCESS UNTIL THE ASSOCIATED REPLACEMENT/NEW PLANT SYSTEMS ARE IN SERVICE AND PROPERLY TESTED AND DEEMED RELIABLE/ACCEPTABLE FOR PERMANENT SERVICE.
4. ALL EXISTING FEEDER WIRING MADE OBSOLETE BY THIS PROJECT SHALL BE DEMOLISHED COMPLETELY. SEE ELECTRICAL DEMOLITION NOTE 3.
5. ALL EXISTING ELECTRICAL EQUIPMENT, CONDUIT, WIRING, DUCTBANKS, SERVICES, DEVICES, ETC. THAT BECOME OBSOLETE WITHIN THIS PROJECT SHALL BE DEMOLISHED COMPLETELY (OTHER ITEMS SHALL REMAIN IN SERVICE). WHERE NEW EQUIPMENT, LIGHTING, RECEPTACLES, CONTROLS, INSTRUMENTS, SUPPORTS, CIRCUITS, ETC. ARE SHOWN WITHIN THESE PLANS, ASSOCIATED EXISTING ITEMS THAT BECOME OBSOLETE AS A RESULT SHALL BE DEMOLISHED.

ELECTRICAL DEMOLITION KEYED NOTES

1. EXISTING STRUCTURE/EQUIPMENT TO BE DEMOLISHED WITHIN THIS PROJECT. DEMOLISH ALL OBSOLETE ELECTRICAL EQUIPMENT, DEVICES, DISCONNECTS, EXPOSED CONDUIT AND WIRING, LIGHTS, ETC TO INCLUDE FEEDERS AND CONTROL/INSTRUMENTATION WIRING CONNECTIONS TO OTHER BUILDINGS AND STRUCTURES.
2. EXISTING STRUCTURE/EQUIPMENT TO BE CONVERTED/MODIFIED WITHIN THIS PROJECT. REMOVE ALL ELECTRICAL EQUIPMENT, DEVICES, RECEPTACLES, LIGHT FIXTURES, CONDUIT AND WIRING TO INCLUDE FEEDERS, ETC. AND CONTROL/INSTRUMENTATION WIRING CONNECTIONS TO OTHER BUILDINGS AND STRUCTURES UNLESS NOTED OTHERWISE. SEE OTHER PLANS FOR NEW REQUIREMENTS.

ELECTRICAL DEMOLITION PLAN

SCALE : 1" = 40'-0"

ALABAMA LICENSED No. 27420 PROFESSIONAL ENGINEER PHILIP D. BLACK 6/30/2023

JACKSON, RENFRO & ASSOCIATES, INC.
ELECTRICAL ENGINEERING & DESIGN
31 INVERNESS CENTER PKWY • SUITE 300 • BIRMINGHAM, AL • 35242
PHILIP D. BLACK, PE
phil@jraee.com
(D) 205.536.7120
(F) 205.995.1078
JRA JOB NO. 223096

REVISIONS			
#	DESCRIPTION	DATE	BY
1			
2			
3			
4			
5			
6			

ELECTRICAL DEMOLITION PLAN
WEDOWEE SEWER SYSTEM IMPROVEMENTS
WEDOWEE WATER, SEWER, & GAS BOARD
TOWN OF WEDOWEE
RANDOLPH COUNTY, ALABAMA

THE KELLEY GROUP
• A CIVIL ENGINEERING COMPANY •
850 Corporate Pwky, Suite 104 Birmingham, Alabama 35242
301 N Dickson St, Tuscumbia, AL 35674

ATTENTION:
THIS BAR = 1 INCH ON ORIGINAL DRAWING. ADJUST SCALE IF THIS BAR ≠ 1 INCH.

PROJECT NO: 20-0016
DRAWN BY: ZJG
CHECKED BY: PDB
SCALE: AS NOTED
DATE: 6/30/2023

SHEET NO.
E10

Z:\CAD\DWG\223096\E10 (SITE DEMO).DWG

6/30/2023 3:29:47 PM

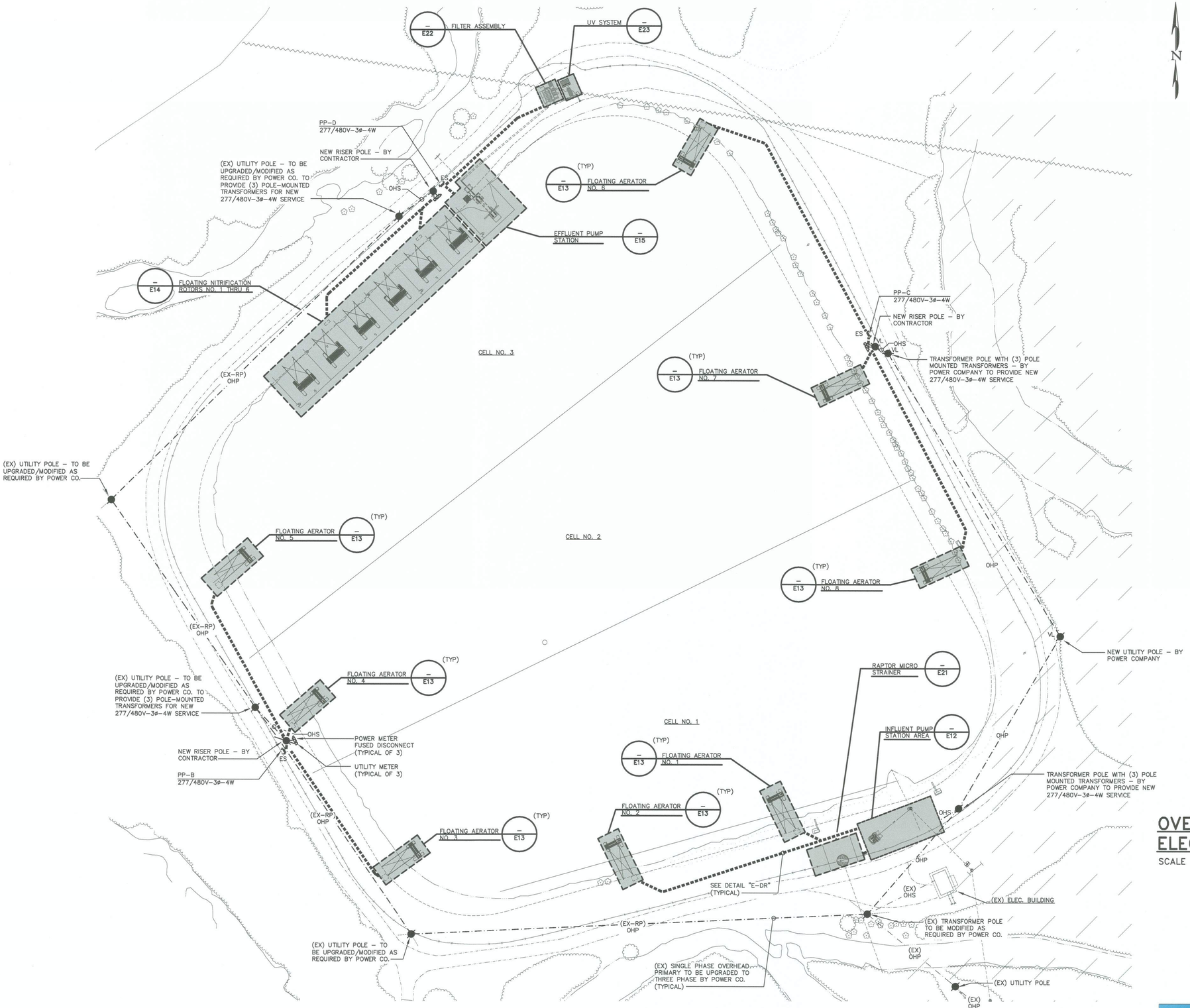

OVERALL SITE ELECTRICAL PLAN

SCALE : 1" = 40'-0"

REVISIONS

#	DESCRIPTION	DATE	BY
1			
2			
3			
4			
5			
6			

OVERALL SITE ELECTRICAL PLAN

WEDOWEE SEWER SYSTEM IMPROVEMENTS
WEDOWEE WATER, SEWER, & GAS BOARD
TOWN OF WEDOWEE
RANDOLPH COUNTY, ALABAMA

THE KELLEY GROUP
• A CIVIL ENGINEERING COMPANY •
850 Corporate Pwky, Suite 104 Birmingham, Alabama 35242
301 N Dickson St, Tuscumbia, AL 35674

ATTENTION:
THIS BAR = 1 INCH ON ORIGINAL DRAWING. ADJUST SCALE IF THIS BAR ≠ 1 INCH.

1"

PROJECT NO: 20-0016
DRAWN BY: ZJG
CHECKED BY: PDB
SCALE: AS NOTED
DATE: 6/30/2023

SHEET NO.
E11

ALABAMA LICENSED No. 27420 PROFESSIONAL ENGINEER PHILIP D. BLACK 6/30/2023

JACKSON, RENFRO & ASSOCIATES, INC.
ELECTRICAL ENGINEERING & DESIGN
21 INVERNESS CENTER PKWY • SUITE 300 • BIRMINGHAM, AL • 35242
PHILIP D. BLACK, PE
phil@jrae.com
(D) 205.536.7120
(F) 205.995.1078
JRA JOB NO. 223096

Z:\CAD\DWG\223096\E11 (SITE).DWG

6/30/2023 3:29:57 PM

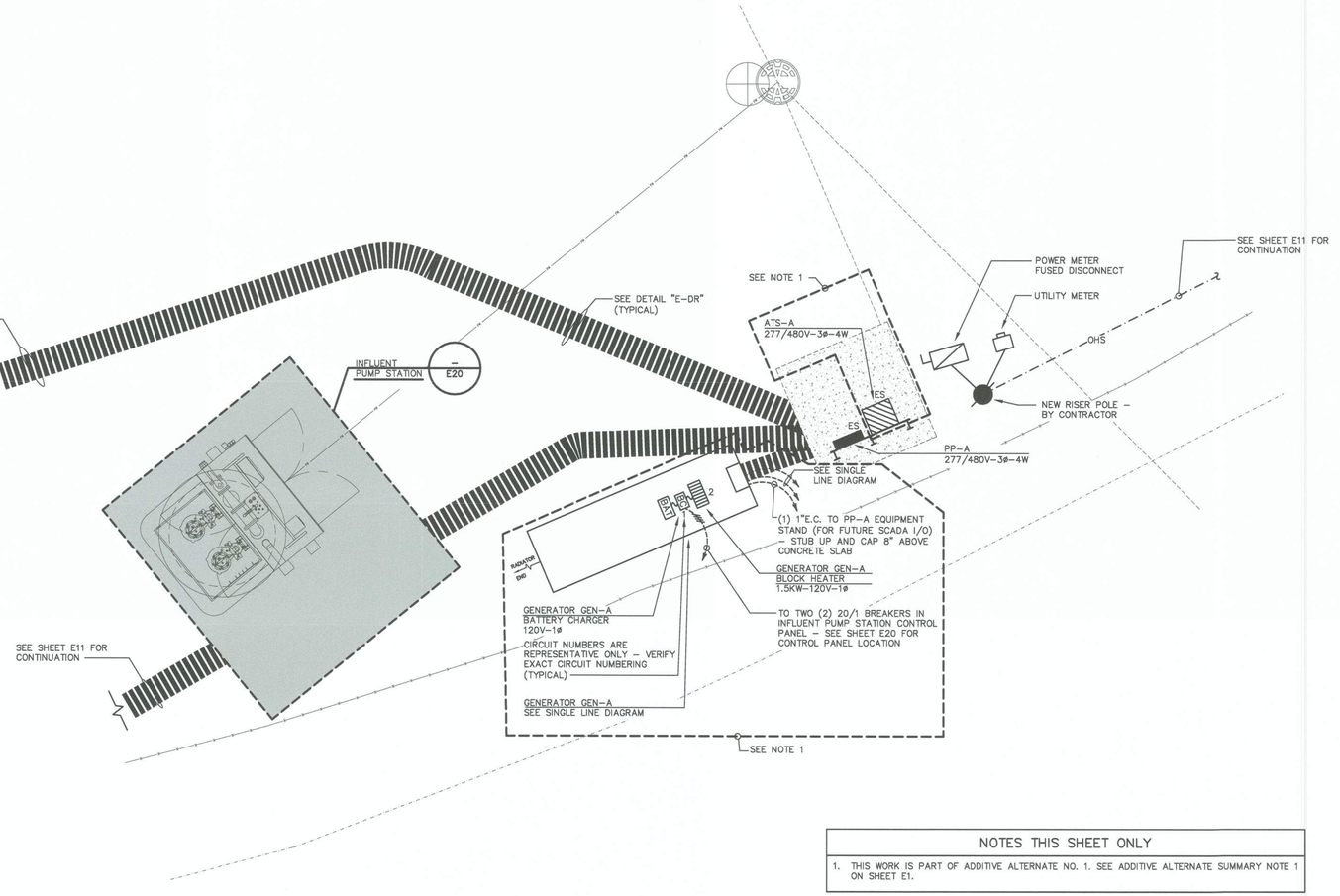

NOTES THIS SHEET ONLY
1. THIS WORK IS PART OF ADDITIVE ALTERNATE NO. 1. SEE ADDITIVE ALTERNATE SUMMARY NOTE 1 ON SHEET E1.

INFLUENT PUMP STATION AREA LARGE SCALE ELECTRICAL PLAN

SCALE : 1/4" = 1'-0"

ALABAMA LICENSED No. 27420 PROFESSIONAL ENGINEER PHILLIP D. BLACK
6/30/2023

JACKSON, RENFRO & ASSOCIATES, INC.
ELECTRICAL ENGINEERING & DESIGN
31 INVERNESS CENTER PKWY • SUITE 300 • BIRMINGHAM, AL • 35242
PHILLIP D. BLACK, PE
phil@jraee.com
(D) 205.536.7120
(P) 205.995.1078
JRA JOB NO. 223096

REVISIONS

#	DESCRIPTION	DATE	BY
1			
2			
3			
4			
5			
6			

INFLUENT P.S. LARGE SCALE ELECTRICAL PLAN
WEDOWEE SEWER SYSTEM IMPROVEMENTS
WEDOWEE WATER, SEWER, & GAS BOARD
TOWN OF WEDOWEE
RANDOLPH COUNTY, ALABAMA

THE KELLEY GROUP
• A CIVIL ENGINEERING COMPANY •
850 Corporate Pwky, Suite 104 Birmingham, Alabama 35242
301 N Dickson St, Tuscumbia, AL 35674

ATTENTION:
THIS BAR = 1 INCH ON ORIGINAL DRAWING.
ADJUST SCALE IF THIS BAR ≠ 1 INCH.

PROJECT NO: 20-0016
DRAWN BY: ZJG
CHECKED BY: PDB
SCALE: AS NOTED
DATE: 6/30/2023

SHEET NO.
E12

Z:\CAD\DWG\223096\E12 (SITE LS).DWG

6/30/2023 3:30:06 PM

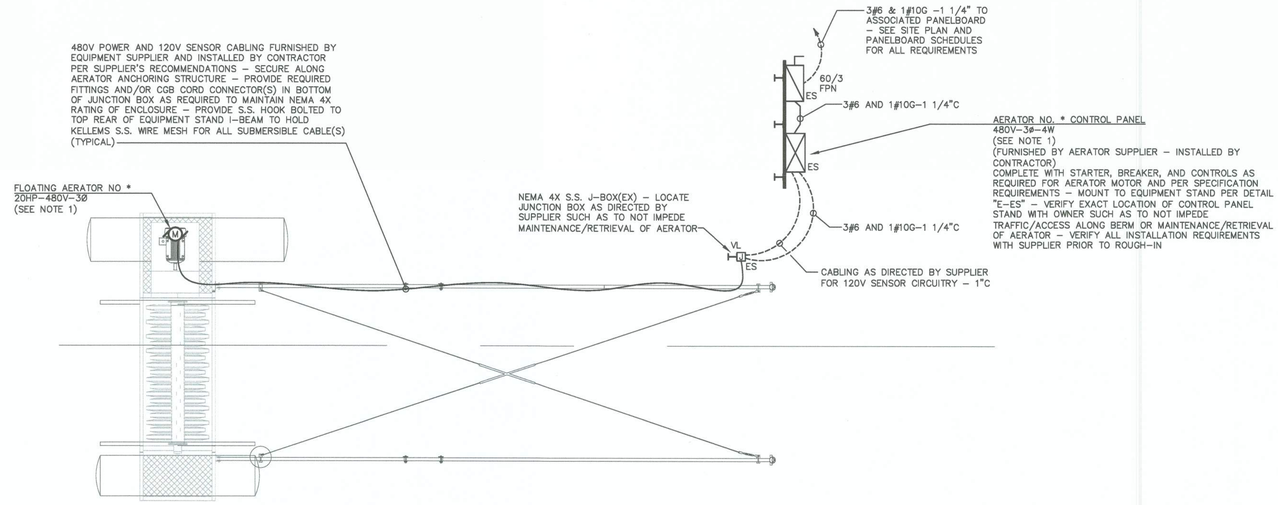

NOTES THIS SHEET ONLY

1. WHERE "*" REPRESENTS UNIQUE AERATOR IDENTIFICATION NUMBER. THIS DETAIL IS TYPICAL FOR ALL EIGHT (8) AERATORS.
2. THIS DIAGRAM IS A TYPICAL DRAWING. COORDINATE ALL CONTROL PANEL, EQUIPMENT STAND, & DEVICE LOCATIONS WITH CIVIL ENGINEER, AERATOR SUPPLIER, AND OWNER PRIOR TO ROUGH–IN.
3. REFER TO DETAIL "E–HAOC" & GENERAL ELECTRICAL NOTE 11 FOR HAZARDOUS AREA DEFINITIONS & GENERAL REQUIREMENTS ASSOCIATED WITH THIS AREA/EQUIPMENT.

TYPICAL FLOATING AERATOR ELECTRICAL PLAN

SCALE : NO SCALE

REVISIONS

#	DESCRIPTION	DATE	BY
1			
2			
3			
4			
5			
6			

TYPICAL FLOATING AERATOR ELEC. PLAN
WEDOWEE SEWER SYSTEM IMPROVEMENTS
WEDOWEE WATER, SEWER, & GAS BOARD
TOWN OF WEDOWEE
RANDOLPH COUNTY, ALABAMA

THE KELLEY GROUP
• A CIVIL ENGINEERING COMPANY •
850 Corporate Pwky, Suite 104 Birmingham, Alabama 35242
301 N Dickson St, Tuscumbia, AL 35674

ATTENTION:
THIS BAR = 1 INCH ON ORIGINAL DRAWING. ADJUST SCALE IF THIS BAR ≠ 1 INCH.
1"

ALABAMA LICENSED No. 27420 PROFESSIONAL ENGINEER PHILIP D. BLACK
6/30/2023

JACKSON, RENFRO & ASSOCIATES, INC.
ELECTRICAL ENGINEERING & DESIGN
3 INVERNESS CENTER PKWY • SUITE 300 • BIRMINGHAM, AL • 35242
PHILIP D. BLACK, PE
phil@jrae.com
(O) 205.536.7120
(F) 205.995.1078
JRA JOB NO. 223096

PROJECT NO: 20-0016
DRAWN BY: ZJG
CHECKED BY: PDB
SCALE: AS NOTED
DATE: 6/30/2023

SHEET NO.
E13

Z:\CAD\DWG\223096\E13 (TYP 20 HP AER).DWG

6/30/2023 3:30:12 PM

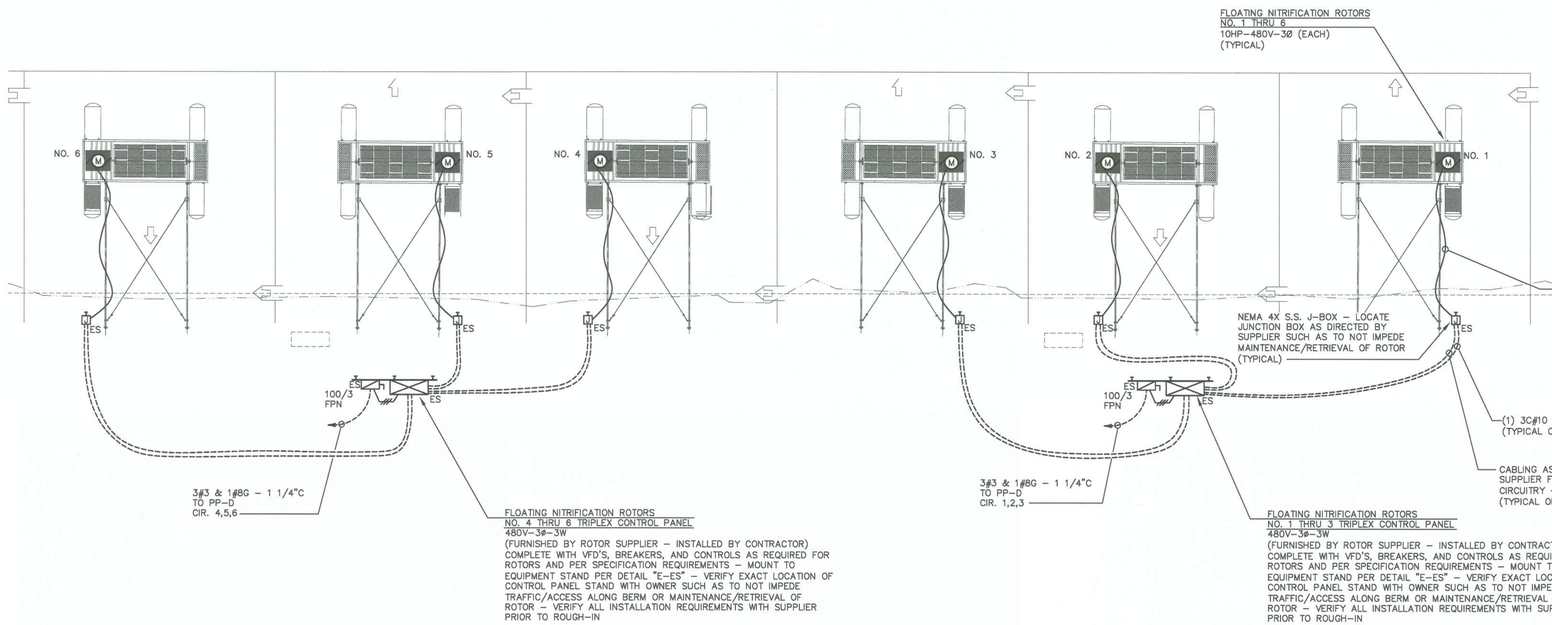

FLOATING NITRIFICATION ROTORS ELECTRICAL PLAN

SCALE : 1" = 10'–0"

NOTES THIS SHEET ONLY
1. REFER TO DETAIL "E–HAOC" & GENERAL ELECTRICAL NOTE 11 FOR HAZARDOUS AREA DEFINITIONS & GENERAL REQUIREMENTS ASSOCIATED WITH THIS AREA/EQUIPMENT.

ALABAMA LICENSED No. 27420 PROFESSIONAL ENGINEER PHILIP D. BLACK 6/30/2023

JACKSON, RENFRO & ASSOCIATES, INC.
ELECTRICAL ENGINEERING & DESIGN
31 INVERNESS CENTER PKWY • SUITE 300 • BIRMINGHAM, AL • 35242
PHILIP D. BLACK, PE
phil@jraee.com
(D) 205.536.7120
(P) 205.995.1078
JRA JOB NO. 223096

REVISIONS

#	DESCRIPTION	DATE	BY
1			
2			
3			
4			
5			
6			

FLOATING NITR. ROTORS ELEC. PLAN

WEDOWEE SEWER SYSTEM IMPROVEMENTS
WEDOWEE WATER, SEWER, & GAS BOARD
TOWN OF WEDOWEE
RANDOLPH COUNTY, ALABAMA

THE KELLEY GROUP
• A CIVIL ENGINEERING COMPANY •
850 Corporate Pwky, Suite 104 Birmingham, Alabama 35242
301 N Dickson St, Tuscumbia, AL 35674

ATTENTION:
THIS BAR = 1 INCH ON ORIGINAL DRAWING. ADJUST SCALE IF THIS BAR ≠ 1 INCH.

1"

PROJECT NO: 20-0016
DRAWN BY: ZJG
CHECKED BY: PDB
SCALE: AS NOTED
DATE: 6/30/2023

SHEET NO.
E14

Z:\CAD\DWG\223096\E14 (10HP BIOFLO).DWG

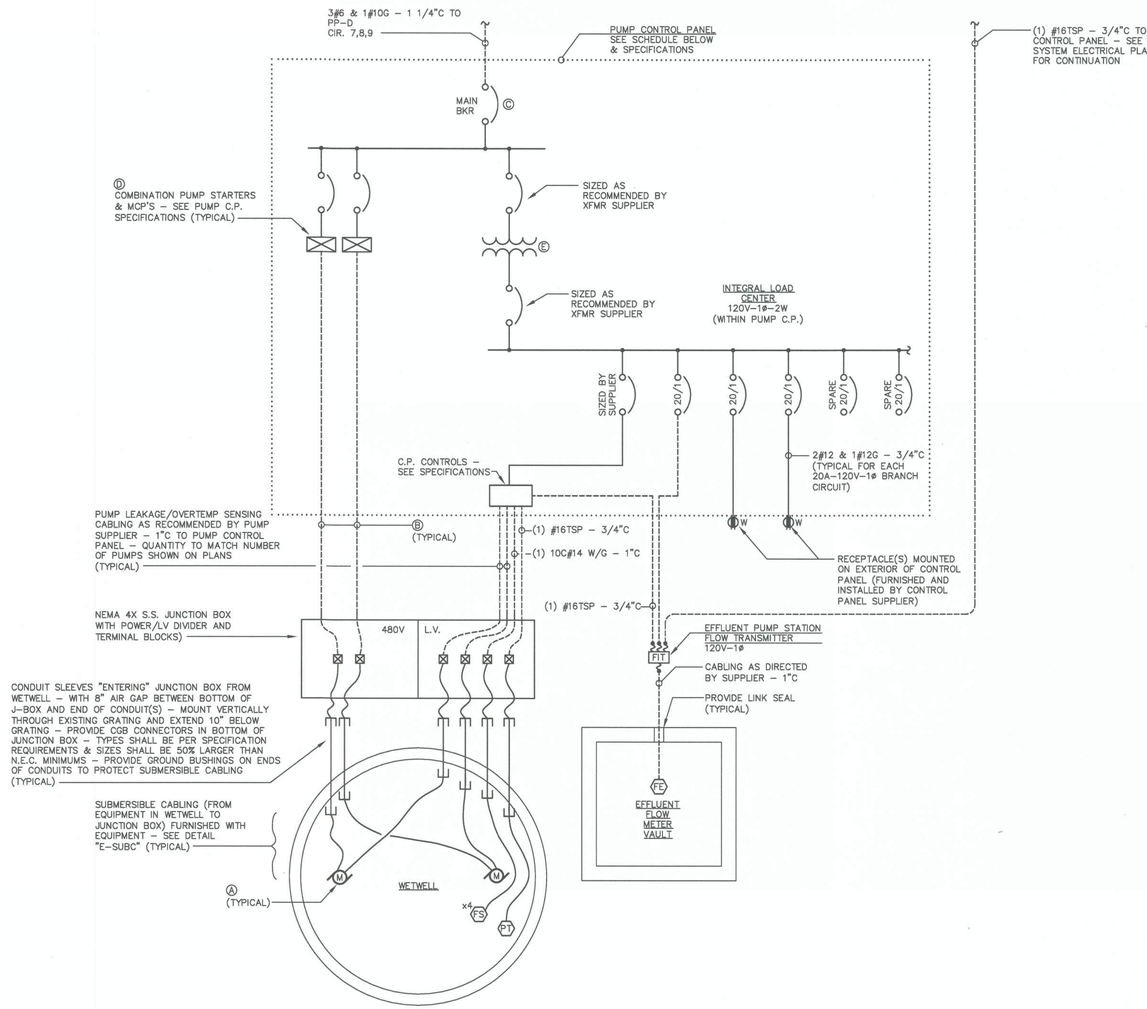

DETAIL "E–EPS"
EFFLUENT PUMP STATION WIRING DIAGRAM

SCALE : NONE

WIRING DIAGRAM WIRING LEGEND	
———	WIRING BY PANEL SUPPLIER
- - - - - - -	FIELD WIRING BY CONTRACTOR

DIAGRAM NOTES

1. THIS IS A TYPICAL DIAGRAM THAT INDICATES PUMP STATION BRANCH CIRCUITRY REQUIREMENTS. IT IS NOT INTENDED TO SPECIFY ALL REQUIRED CIRCUITRY FOR THE PROJECT. SEE PLANS FOR SITE–SPECIFIC QUANTITIES OF DEVICES & EQUIPMENT. SEE SINGLE LINE DIAGRAM FOR ADDITIONAL (FEEDER, ETC.) REQUIREMENTS. PROVIDE ALL INTERCONNECTIONS/CIRCUITRY AS REQUIRED FOR A COMPLETE INSTALLATION.
2. EXACT LOCATIONS OF ALL DEVICES AND EQUIPMENT WITHIN WETWELL SHALL BE AS DIRECTED BY CIVIL ENGINEER.
3. ALL INTERCONNECTING CIRCUITRY BETWEEN SEPARATE EQUIPMENT, DEVICES, ETC. SHALL BE ROUTED UNDERGROUND (RATHER THAN EXPOSED OR ABOVE GRADE) WHERE POSSIBLE.

"E-EPS" DIAGRAM SCHEDULE

PUMP STATION	Ⓐ SUBMERSIBLE PUMPS QTY	Ⓐ SUBMERSIBLE PUMPS RATING	Ⓑ PUMP FEEDERS (FROM STARTER TO W/WJB)	CONTROL PANEL: INPUT VOLTAGE	CONTROL PANEL: KAIC RATING	CONTROL PANEL: ENCLOSURE RATING	CONTROL PANEL: Ⓒ MAIN BREAKER	CONTROL PANEL: Ⓓ STARTER TYPE	CONTROL PANEL: Ⓔ CONTROL TRANSFORMER
EFFLUENT PUMP STATION	2	10HP-480V-3P	(1) 3C#10 W/G (SHIELDED VFD CABLING) - 3/4"C	480V-3P-4W	22KAIC	NEMA 4X S.S.	SIZED BY SUPPLIER	VFD	SIZED BY SUPPLIER

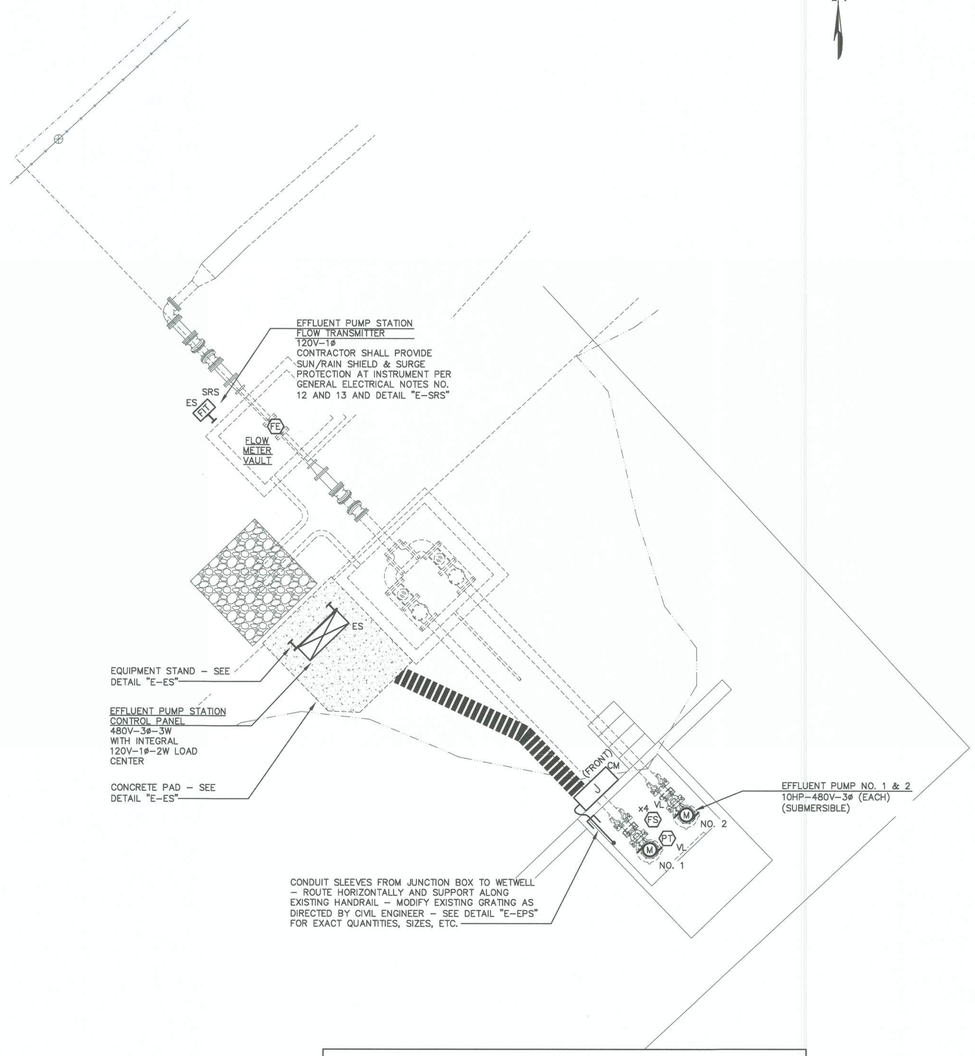

PLAN NOTES

1. THIS PLAN IS INTENDED TO SHOW ELECTRICAL EQUIPMENT/DEVICE LOCATIONS & QUANTITIES ONLY. REFER TO ASSOCIATED PUMP STATION WIRING DIAGRAM & OVERALL SITE ELECTRICAL PLAN FOR SITE CIRCUITRY REQUIREMENTS, FEEDER SIZES, ETC.

EFFLUENT PUMP STATION ELECTRICAL PLAN

SCALE : 1/4" = 1'–0"

ALABAMA LICENSED No. 27420 PROFESSIONAL ENGINEER PHILIP D. BLACK 6/30/2023

JACKSON, RENFRO & ASSOCIATES, INC.
ELECTRICAL ENGINEERING & DESIGN
3I INVERNESS CENTER PKWY • SUITE 300 • BIRMINGHAM, AL • 35242
PHILIP D. BLACK, PE
phil@jraee.com
(D) 205.536.7120
(F) 205.995.1078
JRA JOB NO. 223096

REVISIONS

#	DESCRIPTION	DATE	BY
1			
2			
3			
4			
5			
6			

EFFLUENT PUMP STATION ELECTRICAL PLANS
WEDOWEE SEWER SYSTEM IMPROVEMENTS
WEDOWEE WATER, SEWER, & GAS BOARD
TOWN OF WEDOWEE
RANDOLPH COUNTY, ALABAMA

THE KELLEY GROUP
• A CIVIL ENGINEERING COMPANY •
850 Corporate Pwky, Suite 104 301 N Dickson St,
Birmingham, Alabama 35242 Tuscumbia, AL 35674

ATTENTION: THIS BAR = 1 INCH ON ORIGINAL DRAWING. ADJUST SCALE IF THIS BAR ≠ 1 INCH.

PROJECT NO: 20-0016
DRAWN BY: ZJG
CHECKED BY: PDB
SCALE: AS NOTED
DATE: 6/30/2023

SHEET NO. E15

6/30/2023 3:30:18 PM

Z:\CAD\DWG\223096\E15 (EFFLUENT PS).DWG

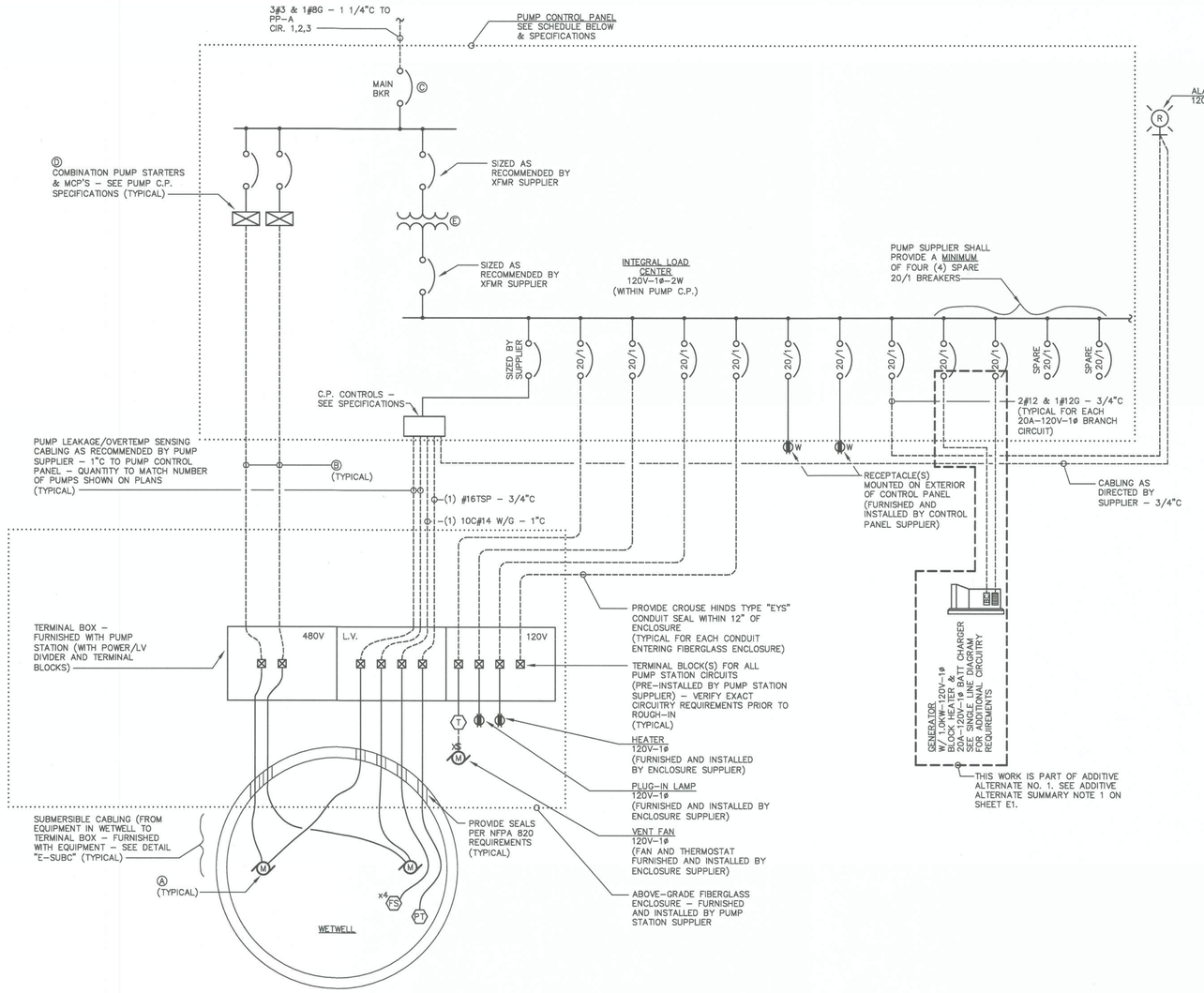

DETAIL "E–IPS"
SUBMERSIBLE INFLUENT PUMP STATION WIRING DIAGRAM

SCALE : NONE

WIRING DIAGRAM WIRING LEGEND	
———	WIRING BY PANEL SUPPLIER
– – – – – – –	FIELD WIRING BY CONTRACTOR

DIAGRAM NOTES

1. THIS IS A TYPICAL DIAGRAM THAT INDICATES PUMP STATION BRANCH CIRCUITRY REQUIREMENTS. IT IS NOT INTENDED TO SPECIFY ALL REQUIRED CIRCUITRY FOR THE PROJECT. SEE PLANS FOR SITE–SPECIFIC QUANTITIES OF DEVICES & EQUIPMENT. SEE SINGLE LINE DIAGRAM AND PANEL SCHEDULES FOR ADDITIONAL (FEEDER, ETC.) REQUIREMENTS. PROVIDE ALL INTERCONNECTIONS/CIRCUITRY AS REQUIRED FOR A COMPLETE INSTALLATION.
2. EXACT LOCATIONS OF ALL DEVICES AND EQUIPMENT WITHIN WETWELL SHALL BE AS DIRECTED BY CIVIL ENGINEER.
3. ALL INTERCONNECTING CIRCUITRY BETWEEN SEPARATE EQUIPMENT, DEVICES, ETC. SHALL BE ROUTED UNDERGROUND (RATHER THAN EXPOSED OR ABOVE GRADE) WHERE POSSIBLE.

"E-IPS" DIAGRAM SCHEDULE

PUMP STATION	Ⓐ SUBMERSIBLE PUMPS QTY	Ⓐ SUBMERSIBLE PUMPS RATING	Ⓑ PUMP FEEDERS (FROM STARTER TO WWJB)	CONTROL PANEL INPUT VOLTAGE	CONTROL PANEL KAIC RATING	CONTROL PANEL ENCLOSURE RATING	CONTROL PANEL Ⓒ MAIN BREAKER	CONTROL PANEL Ⓓ STARTER TYPE	CONTROL PANEL Ⓔ CONTROL TRANSFORMER
INFLUENT PUMP STATION	2	15HP–480V–3P	(1) 3C#8 W/G (SHIELDED VFD CABLING) - 1"C	480V–3P–4W	22KAIC	NEMA 4X S.S.	SIZED BY SUPPLIER	VFD	5KVA (MINIMUM)

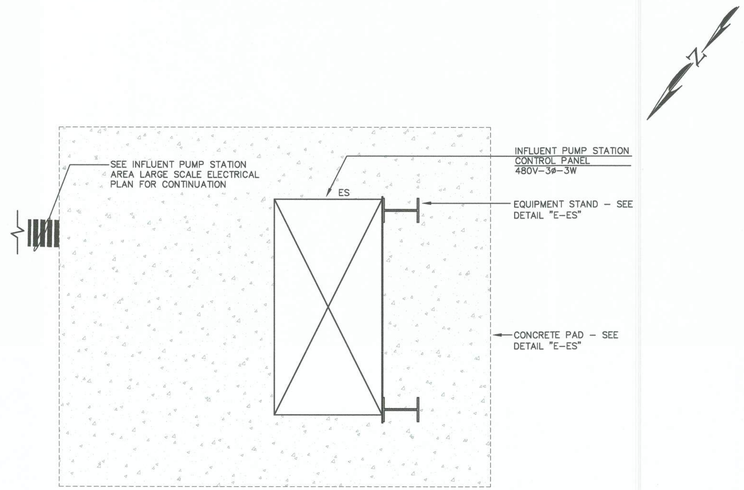

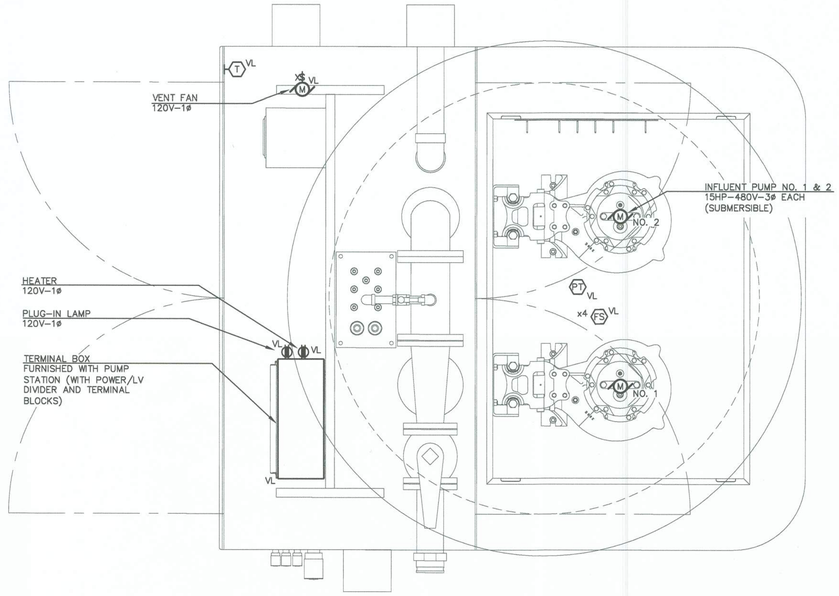

PLAN NOTES

1. THIS PLAN IS INTENDED TO SHOW ELECTRICAL EQUIPMENT/DEVICE LOCATIONS & QUANTITIES ONLY. REFER TO ASSOCIATED PUMP STATION WIRING DIAGRAM & OVERALL SITE ELECTRICAL PLAN FOR SITE CIRCUITRY REQUIREMENTS, FEEDER SIZES, ETC.
2. ENTIRE ELECTRICAL INSTALLATION WITHIN HAZARDOUS AREAS AS DEFINED BELOW AND BY NFPA 820 SHALL COMPLY WITH ALL APPLICABLE NEC REQUIREMENTS FOR CONDUIT SEALS, RACEWAY TYPES, MATERIAL/DEVICE TYPES, ETC. SEE GENERAL ELECTRICAL NOTE 11 AND DETAIL "E–HALS".
   - 2.1 THE FOLLOWING AREAS IN THIS PLAN SHALL BE CONSIDERED CLASS 1, DIVISION I AREAS
     A. AREAS WITHIN WETWELL.
   - 2.2 THE FOLLOWING AREAS IN THIS PLAN SHALL BE CONSIDERED CLASS I, DIVISION II, GROUP D AREAS
     A. AREAS WITHIN A 10' ENVELOPE AROUND STRAINER EQUIPMENT.

INFLUENT PUMP STATION ELECTRICAL PLAN

SCALE : 1" = 1'–0"

REVISIONS #	DESCRIPTION	DATE	BY
1			
2			
3			
4			
5			
6			

INFLUENT PUMP STATION ELECTRICAL PLANS
WEDOWEE SEWER SYSTEM IMPROVEMENTS
WEDOWEE WATER, SEWER, & GAS BOARD
TOWN OF WEDOWEE
RANDOLPH COUNTY, ALABAMA

THE KELLEY GROUP
• A CIVIL ENGINEERING COMPANY •
850 Corporate Pwky, Suite 104 Birmingham, Alabama 35242
301 N Dickson St, Tuscumbia, AL 35674

ATTENTION: THIS BAR = 1 INCH ON ORIGINAL DRAWING. ADJUST SCALE IF THIS BAR ≠ 1 INCH.

PROJECT NO: 20-0016
DRAWN BY: ZJG
CHECKED BY: PDB
SCALE: AS NOTED
DATE: 6/30/2023

SHEET NO. **E20**

ALABAMA LICENSED No. 27420 PROFESSIONAL ENGINEER PHILIP D. BLACK 6/30/2023

JACKSON, RENFRO & ASSOCIATES, INC.
ELECTRICAL ENGINEERING & DESIGN
31 INVERNESS CENTER PKWY • SUITE 300 • BIRMINGHAM, AL • 35242
PHILIP D. BLACK, PE
phil@jrae.com
(D) 205.536.7120
(P) 205.995.1078
JRA JOB NO. 223096

6/30/2023 3:30:27 PM

Z:\CAD\DWG\223096\E20 (INFLUENT PS).DWG

6/30/2023 3:30:31 PM

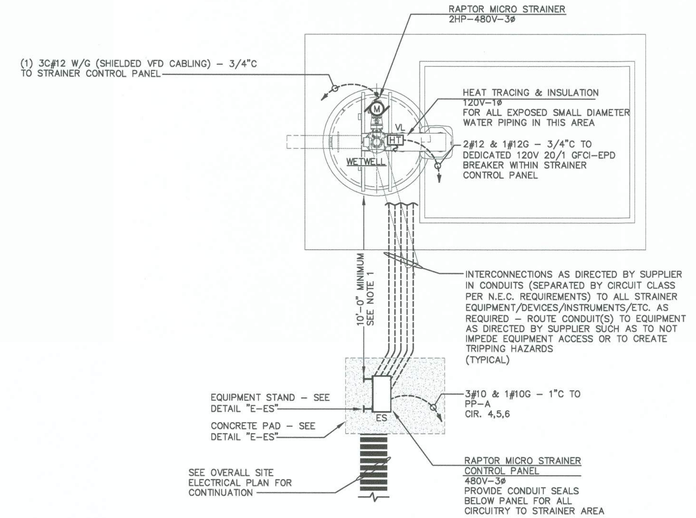

RAPTOR MICRO STRAINER ELECTRICAL PLAN

SCALE : 1/4" = 1'-0"

PLAN NOTES
1. ENTIRE ELECTRICAL INSTALLATION WITHIN HAZARDOUS AREAS SHALL COMPLY WITH ALL APPLICABLE NEC REQUIREMENTS FOR CONDUIT SEALS, RACEWAY TYPES, MATERIAL/DEVICE TYPES, ETC. SEE NFPA 820, GENERAL ELECTRICAL NOTE 11, AND DETAIL "E-HAOC".

ALABAMA LICENSED No. 27420 PROFESSIONAL ENGINEER PHILIP D. BLACK
6/30/2023

JACKSON, RENFRO & ASSOCIATES, INC
ELECTRICAL ENGINEERING & DESIGN
31 INVERNESS CENTER PKWY • SUITE 300 • BIRMINGHAM, AL • 35242
PHILIP D. BLACK, PE
phil@jraee.com
(D) 205.536.7120
(P) 205.995.1078
JRA JOB NO. 223096

REVISIONS			
#	DESCRIPTION	DATE	BY
2			
3			
4			
5			
6			

STRAINER ELECTRICAL PLANS

WEDOWEE SEWER SYSTEM IMPROVEMENTS
WEDOWEE WATER, SEWER, & GAS BOARD
TOWN OF WEDOWEE
RANDOLPH COUNTY, ALABAMA

THE KELLEY GROUP
- A CIVIL ENGINEERING COMPANY -
850 Corporate Pwky, Suite 104 Birmingham, Alabama 35242
301 N Dickson St, Tuscumbia, AL 35674

ATTENTION:
THIS BAR = 1 INCH ON ORIGINAL DRAWING. ADJUST SCALE IF THIS BAR ≠ 1 INCH.

1"

PROJECT NO: 20-0016
DRAWN BY: ZJG
CHECKED BY: PDB
SCALE: AS NOTED
DATE: 6/30/2023

SHEET NO.
E21

Z:\CAD\DWG\223096\E21 (STRAINER).DWG

6/30/2023 3:30:36 PM

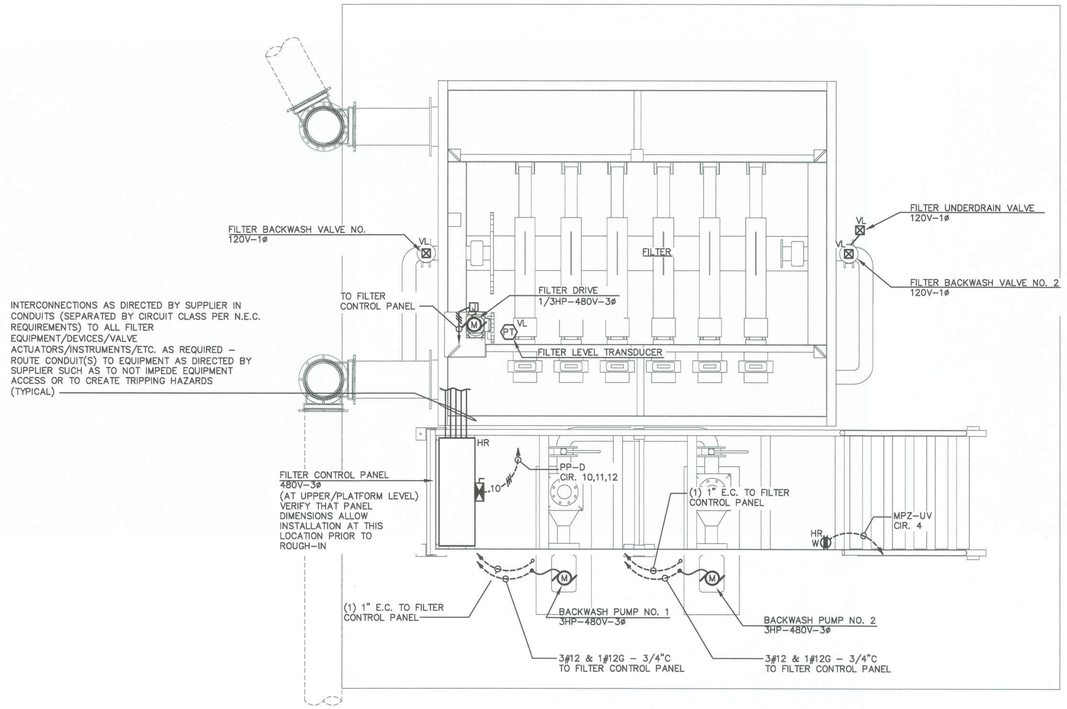

FILTER ASSEMBLY ELECTRICAL PLAN

SCALE : 1/2" = 1'–0"

REVISIONS			
#	DESCRIPTION	DATE	BY
1			
2			
3			
4			
5			
6			

FILTER ASSEMBLY ELECTRICAL PLAN
WEDOWEE SEWER SYSTEM IMPROVEMENTS
WEDOWEE WATER, SEWER, & GAS BOARD
TOWN OF WEDOWEE
RANDOLPH COUNTY, ALABAMA

THE KELLEY GROUP
• A CIVIL ENGINEERING COMPANY •
850 Corporate Pwky, Suite 104 Birmingham, Alabama 35242
301 N Dickson St, Tuscumbia, AL 35674

ATTENTION:
THIS BAR = 1 INCH ON ORIGINAL DRAWING. ADJUST SCALE IF THIS BAR ≠ 1 INCH.

ALABAMA LICENSED No. 27420 PROFESSIONAL ENGINEER PHILIP D. BLACK
6/30/2023

JACKSON, RENFRO & ASSOCIATES, INC.
ELECTRICAL ENGINEERING & DESIGN
31 INVERNESS CENTER PKWY • SUITE 300 • BIRMINGHAM, AL • 35242
PHILIP D. BLACK, PE
phil@jraee.com
(D) 205.536.7120
(P) 205.995.1078
JRA JOB NO. 223096

PROJECT NO: 20-0016
DRAWN BY: ZJG
CHECKED BY: PDB
SCALE: AS NOTED
DATE: 6/30/2023

SHEET NO.
E22

Z:\CAD\DWG\223096\E22\(FILTER).DWG

6/30/2023 3:30:42 PM

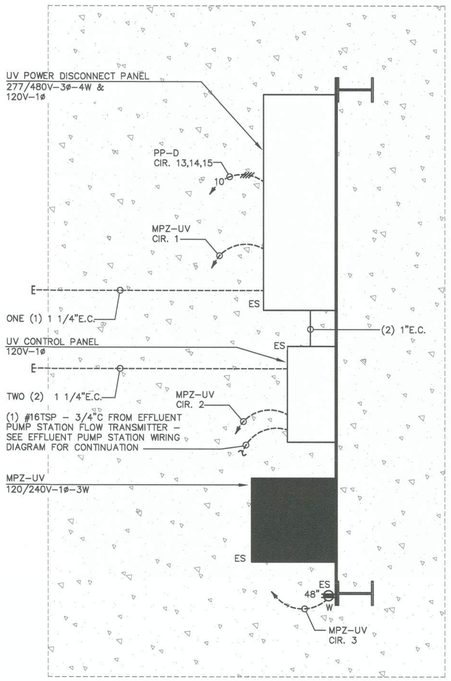

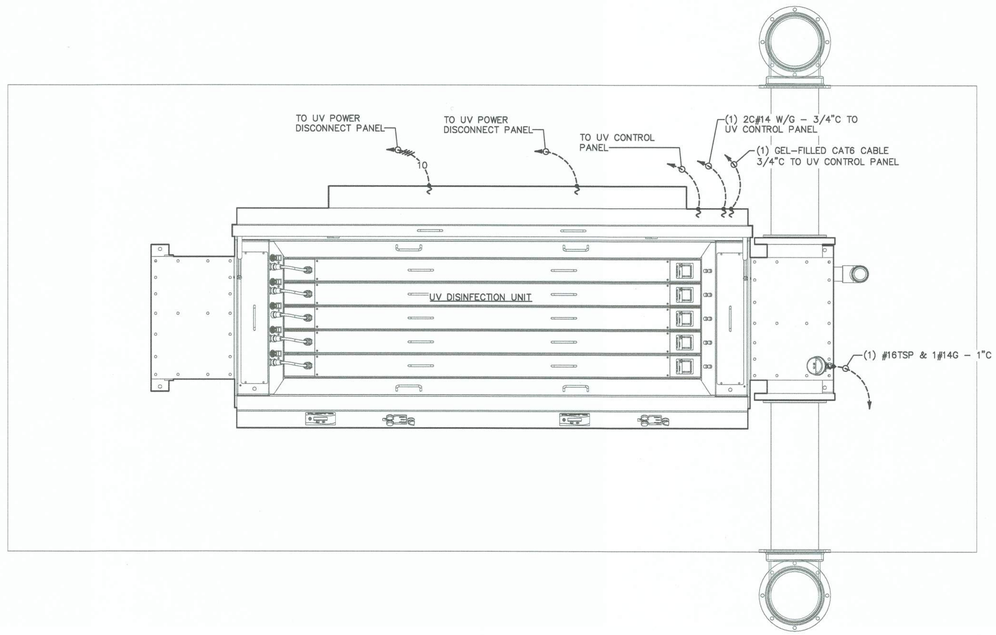

UV SYSTEM ELECTRICAL PLAN

SCALE : 1" = 1'-0"

REVISIONS			
#	DESCRIPTION	DATE	BY
1			
2			
3			
4			
5			
6			

UV SYSTEM ELECTRICAL PLAN

WEDOWEE SEWER SYSTEM IMPROVEMENTS
WEDOWEE WATER, SEWER, & GAS BOARD
TOWN OF WEDOWEE
RANDOLPH COUNTY, ALABAMA

THE KELLEY GROUP
• A CIVIL ENGINEERING COMPANY •
850 Corporate Pwky, Suite 104 Birmingham, Alabama 35242
301 N Dickson St, Tuscumbia, AL 35674

ATTENTION:
THIS BAR = 1 INCH ON ORIGINAL DRAWING.
ADJUST SCALE IF THIS BAR ≠ 1 INCH.

PROJECT NO: 20-0016
DRAWN BY: ZJG
CHECKED BY: PDB
SCALE: AS NOTED
DATE: 6/30/2023

ALABAMA LICENSED No. 27420 PROFESSIONAL ENGINEER PHILIP D. BLACK
6/30/2023

JACKSON, RENFRO & ASSOCIATES, INC.
ELECTRICAL ENGINEERING & DESIGN
35 INVERNESS CENTER PKWY • SUITE 300 • BIRMINGHAM, AL • 35242
PHILIP D. BLACK, PE
phil@jrae.com
(O) 205.536.7120
(F) 205.995.1078
JRA JOB NO. 223096

SHEET NO.
E23

Z:\CAD\DWG\223096\E23 (UV).DWG

6/30/2023 3:30:47 PM

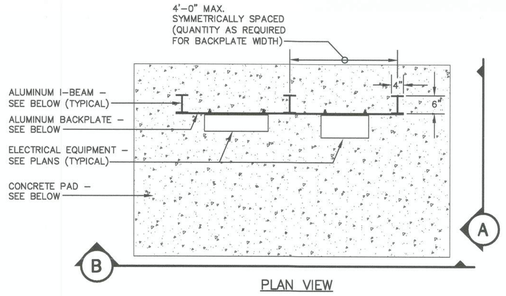

PLAN VIEW

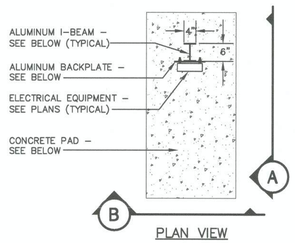

PLAN VIEW

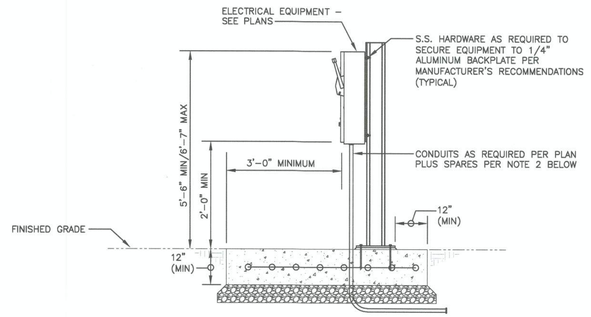

A PROFILE VIEW

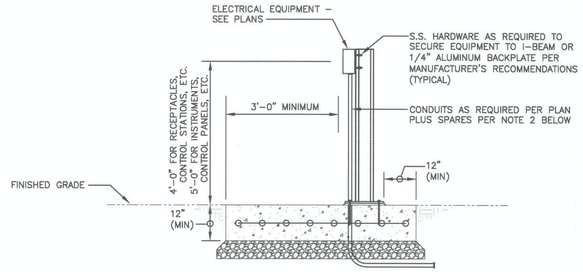

A PROFILE VIEW

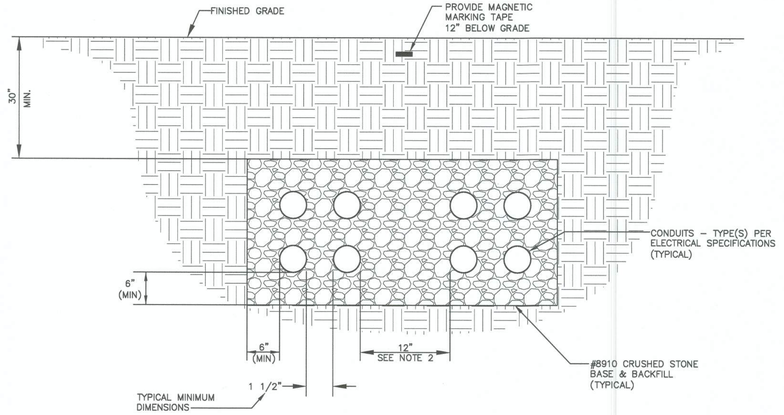

DETAIL "E-DR" TYPICAL DUCT RUN SECTION

SCALE : NONE

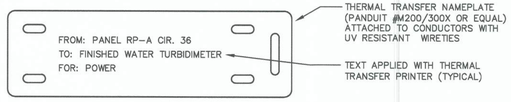

DETAIL "E-CL" TYPICAL CIRCUIT LABEL

SCALE : NONE

NOTES THIS DETAIL ONLY
1. CIRCUIT LABEL TYPES SHOWN ABOVE SHALL BE USED TO IDENTIFY ALL CIRCUITS WITHIN PULLBOXES, HANDHOLES, VAULTS JUNCTION BOXES LARGER THAN 4-11/16", APPROXIMATELY EVERY 50 FEET WITHIN CABLE TRAYS (INCLUDING AT MAJOR CABLE TRAY JUNCTIONS AND BREAKOUT LOCATIONS) AND AT OTHER SIMILAR LOCATIONS. SEE SPECIFICATIONS FOR LABELING REQUIREMENTS IN OTHER AREAS.
2. CIRCUIT NUMBERS SHALL BE IDENTIFIED FOR ALL CIRCUITS FED FROM LIGHTING OR POWER PANELBOARDS.
3. "FROM", "TO" & "FOR" TEXT SHOWN ABOVE ARE FOR EXAMPLE PURPOSES ONLY. NAMES/NUMBERS SHALL BE ADJUSTED TO MATCH ASSOCIATED CIRCUITS/CABLES.
4. SEE SPECIFICATIONS FOR ADDITIONAL REQUIREMENTS.

B FRONT VIEW

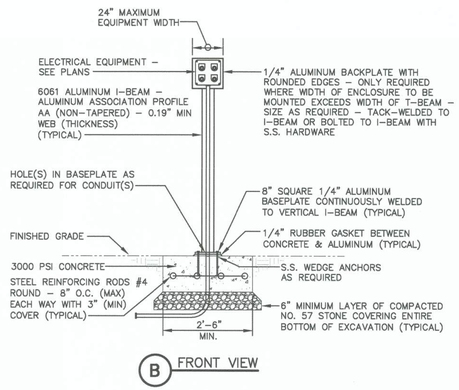

B FRONT VIEW

DETAIL "E-ES" EQUIPMENT SUPPORT

SCALE : NONE

DETAIL NOTES
1. ALL DIMENSIONS SHOWN ARE TYPICAL.
2. PROVIDE TWO (2) 1"E.C. FROM ALL DISTRIBUTION PANELS, LIGHTING PANELS, PLC'S AND CONTROL PANELS ROUTED BELOW CONCRETE PAD TO NEAREST PULLBOX OR ACCESSIBLE STUB OUT LOCATION (NOT UNDERNEATH CONCRETE/ROCK/STRUCTURE/ETC).

NAME:	RP-A
RATING:	120/208V-3ø-4W
FED FROM:	PP-A CIR. 4 (IN MAIN ELEC. ROOM)

DETAIL "E-EDL" ELECTRICAL DISTRIBUTION EQUIPMENT LABEL

SCALE : NONE

DETAIL NOTES
1. PANEL NAMES & RATINGS LISTED ABOVE ARE FOR EXAMPLE PURPOSES ONLY. NAMES & RATINGS SHALL BE ADJUSTED TO MATCH ASSOCIATED EQUIPMENT.
2. THE INTENT OF THIS DETAIL IS TO DEMONSTRATE GENERAL ELECTRICAL IDENTIFICATION REQUIREMENTS FOR ELECTRICAL DISTRIBUTION AND UTILIZATION EQUIPMENT. REFER TO SPECIFICATIONS FOR SPECIFIC REQUIREMENTS REGARDING LOCATIONS, CONTENT, MATERIALS, ETC..

ELECTRICAL DETAILS LEGEND	
E-ES	E-EDL
	E-DR
	E-CL

JACKSON, RENFRO & ASSOCIATES, INC.
ELECTRICAL ENGINEERING & DESIGN
31 INVERNESS CENTER PKWY • SUITE 300 • BIRMINGHAM, AL • 35242
PHILLIP D. BLACK, PE
phil@jraee.com
(O) 205.536.7120
(F) 205.995.1078
JRA JOB NO. 223096

ALABAMA LICENSED No. 27420 PROFESSIONAL ENGINEER PHILLIP D. BLACK 6/30/2023

REVISIONS			
#	DESCRIPTION	DATE	BY
1			
2			
3			
4			
5			
6			

ELECTRICAL DETAILS

WEDOWEE SEWER SYSTEM IMPROVEMENTS
WEDOWEE WATER, SEWER, & GAS BOARD
TOWN OF WEDOWEE
RANDOLPH COUNTY, ALABAMA

THE KELLEY GROUP
• A CIVIL ENGINEERING COMPANY •
850 Corporate Pwky, Suite 104 Birmingham, Alabama 35242
301 N Dickson St, Tuscumbia, AL 35674

ATTENTION: THIS BAR = 1 INCH ON ORIGINAL DRAWING. ADJUST SCALE IF THIS BAR ≠ 1 INCH.

1"

PROJECT NO: 20-0016
DRAWN BY: ZJG
CHECKED BY: PDB
SCALE: AS NOTED
DATE: 6/30/2023

SHEET NO.
E30

Z:\CAD\DWG\223096\E30 (DETAILS).DWG

6/30/2023 3:30:51 PM

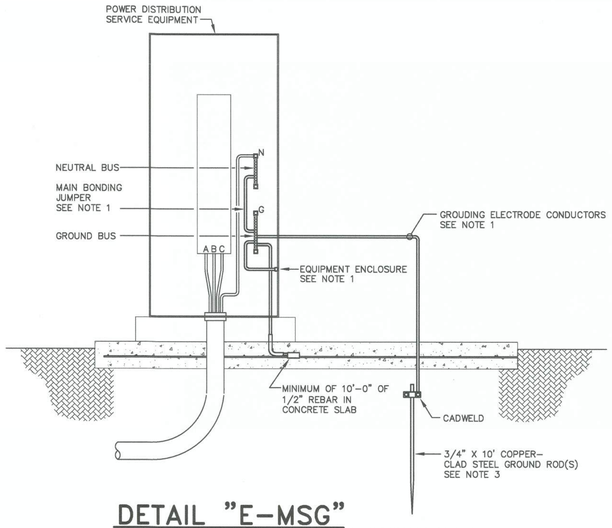

DETAIL "E-MSG"
MAIN SERVICE GROUNDING
SCALE : NONE

DETAIL NOTES
1. ALL GROUNDING ELECTRODE CONDUCTORS AND MAIN BONDING JUMPERS SHALL BE INSULATED COPPER, SIZED IN ACCORDANCE WITH NEC TABLE 250.66 UNLESS NOTED OTHERWISE.
2. THE INTERSYSTEM BONDING JUMPER SHALL BE INSULATED COPPER, SIZED TO MATCH THE GROUNDING ELECTRODE CONDUCTOR OR #6AWG, WHICHEVER IS GREATER.
3. ADDITIONAL GROUND RODS SHALL BE INSTALLED A MINIMUM OF SIX (6) FEET APART AND CONNECTED BY GROUNDING ELECTRODE CONDUCTORS UNTIL THE GROUND RESISTANCE DOES NOT EXCEED FIVE (5) OHMS.
4. ALL GROUNDING CONDUCTORS SHALL BE INSTALLED IN CONDUIT (TYPE PER SPECIFICATION REQUIREMENTS) UNLESS SPECIFICALLY NOTED OTHERWISE. METAL CONDUITS SHALL BE GROUNDED PER NEC REQUIREMENTS.
5. REFER TO "GROUNDING" SPECIFICATIONS SECTION FOR ADDITIONAL GROUNDING REQUIREMENTS.

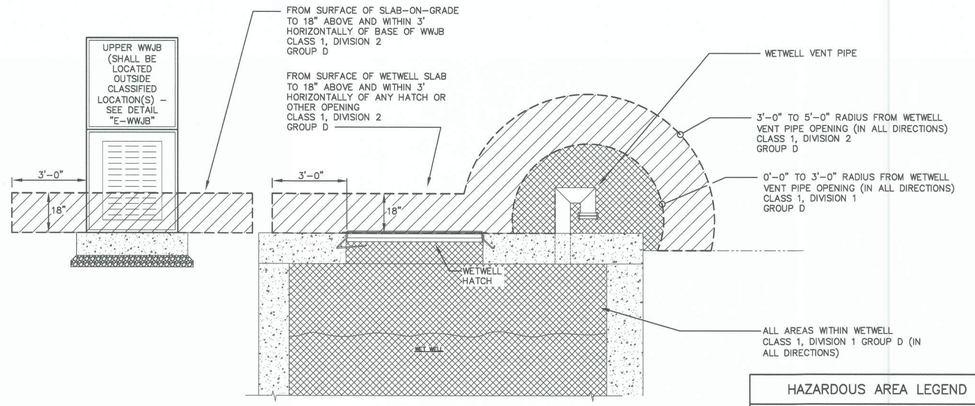

HAZARDOUS AREA LEGEND
CLASS 1, DIVISION 1, GROUP D AREA
CLASS 1, DIVISION 2, GROUP D AREA

DETAIL "E-HALS"
HAZARDOUS AREA CLASSIFICATION FOR ENCLOSED WASTEWATER WETWELLS
SCALE : NONE

DETAIL NOTES
1. ALL EQUIPMENT, DEVICES, CIRCUITRY, ETC, SHALL BE KEPT OUT OF HAZARDOUS AREAS UNLESS SPECIFICALLY SHOWN OTHERWISE. ENTIRE ELECTRICAL INSTALLATION WITHIN HAZARDOUS AREAS AS (DEFINED ON PLANS OR BY NFPA 820) SHALL COMPLY WITH ALL APPLICABLE NEC REQUIREMENTS FOR INSTALLATION, CONDUIT SEALS, RACEWAY TYPES, MATERIAL/DEVICE TYPES, ETC. GENERAL PROJECT INTENT IS TO NOT REQUIRE CONDUIT SEALS (PER DETAIL "E-WWJB")
2. WHERE MULTIPLE HAZARDOUS AREA ZONES OVERLAP, THE MORE STRINGENT ZONE CLASSIFICATION SHALL APPLY.

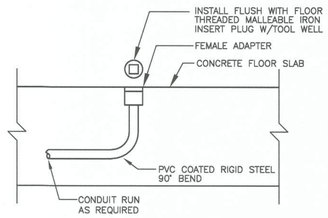

DETAIL "E-FC"
FUTURE CONDUIT STUB-UP
SCALE : NONE

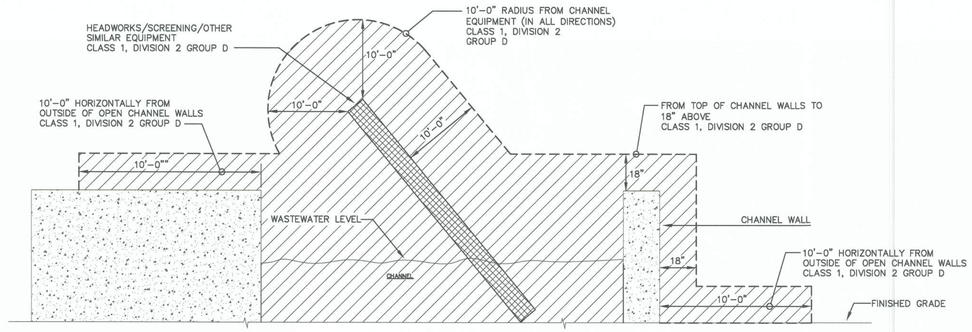

DETAIL "E-HAOC"
HAZARDOUS AREA CLASSIFICATION FOR OPEN WASTEWATER CHANNELS & HEADWORKS EQUIPMENT
SCALE : NONE

DETAIL NOTES
1. ALL EQUIPMENT, DEVICES, CIRCUITRY, ETC, SHALL BE KEPT OUT OF HAZARDOUS AREAS UNLESS SPECIFICALLY SHOWN OTHERWISE. ENTIRE ELECTRICAL INSTALLATION WITHIN HAZARDOUS AREAS AS (DEFINED ON PLANS OR BY NFPA 820) SHALL COMPLY WITH ALL APPLICABLE NEC REQUIREMENTS FOR INSTALLATION, CONDUIT SEALS, RACEWAY TYPES, MATERIAL/DEVICE TYPES, ETC. GENERAL PROJECT INTENT IS TO MINIMIZE EQUIPMENT/DEVICES/CIRCUITRY LOCATED WITHIN HAZARDOUS AREAS.

HAZARDOUS AREA LEGEND
CLASS 1, DIVISION 1, GROUP D AREA
CLASS 1, DIVISION 2, GROUP D AREA

ELECTRICAL DETAILS LEGEND	
E-MSG	E-HALS
E-FC	E-HAOC

JACKSON, RENFRO & ASSOCIATES, INC.
ELECTRICAL ENGINEERING & DESIGN
311 INVERNESS CENTER PKWY • SUITE 300 • BIRMINGHAM, AL • 35242
PHILIP D. BLACK, PE
phil@jraec.com
(O) 205.536.7120
(F) 205.995.1078
JRA JOB NO. 223096

ALABAMA LICENSED No. 27420 PROFESSIONAL ENGINEER PHILIP D. BLACK
6/30/2023

REVISIONS			
#	DESCRIPTION	DATE	BY
1			
2			
3			
4			
5			
6			

ELECTRICAL DETAILS
WEDOWEE SEWER SYSTEM IMPROVEMENTS
WEDOWEE WATER, SEWER, & GAS BOARD
TOWN OF WEDOWEE
RANDOLPH COUNTY, ALABAMA

THE KELLEY GROUP
• A CIVIL ENGINEERING COMPANY •
850 Corporate Pwky, Suite 104 Birmingham, Alabama 35242
301 N Dickson St, Tuscumbia, AL 35674

ATTENTION:
THIS BAR = 1 INCH ON ORIGINAL DRAWING. ADJUST SCALE IF THIS BAR ≠ 1 INCH.
1"

PROJECT NO: 20-0016
DRAWN BY: ZJG
CHECKED BY: PDB
SCALE: AS NOTED
DATE: 6/30/2023

SHEET NO.
E31

Z:\CAD\DWG\223096\E31 (DETAILS).DWG

6/30/2023 3:30:56 PM

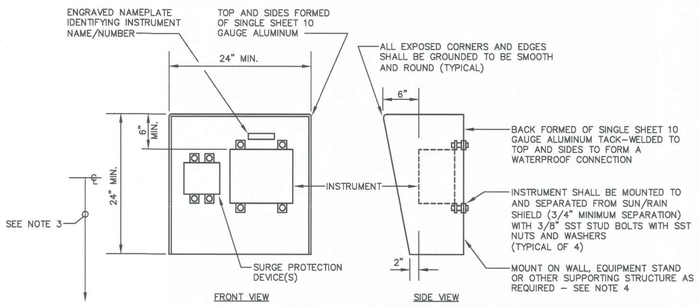

DETAIL "E-SRS"
INSTRUMENT SUN/RAIN SHIELD INSTALLATION DETAIL

SCALE : NONE

DETAIL NOTES
1. SUN/RAIN SHIELDS SHALL BE FURNISHED FOR ALL ELECTRONIC INSTRUMENTS THAT WILL BE EXPOSED TO SUN OR RAIN (OR WHERE OTHERWISE SPECIFICALLY NOTED).
2. DIMENSIONS SHOWN ABOVE ARE MINIMUM. SUN/RAIN SHIELDS SHALL BE SUFFICIENTLY SIZED TO ACCOMODATE INSTRUMENT PLUS ASSOCIATED SURGE PROTECTION DEVICE(S), POWER SUPPLIES, AND OTHER SIMILAR DEVICES.
3. CENTERLINE OF INSTRUMENT SHALL BE LOCATED AT APPROXIMATELY 60" ABOVE GRADE/FLOOR LEVEL.
4. WHERE SUN/RAIN SHIELD IS SHOWN TO BE MOUNTED AT HANDRAIL(S) WITH LESS THAN 60" OF FRONTAL CLEARANCE (FOR PROPOSED INSTRUMENT), PROVIDE TWO (2) SETS OF VERTICAL 316 STAINLESS STEEL UNISTRUT FRAMES FROM "BACK" SIDE OF BOTH RAILS OF HANDRAIL SYSTEM AS REQUIRED TO OFFSET SUN/RAIN SHIELD BEHIND HANDRAIL SYSTEM, SUCH THAT FRONT OF SUN/RAIN SHIELD DOES NOT PROTRUDE INTO WALKWAY PAST INSIDE OF HANDRAIL, TO "BACK" SIDE OF SUN/RAIN SHIELD.

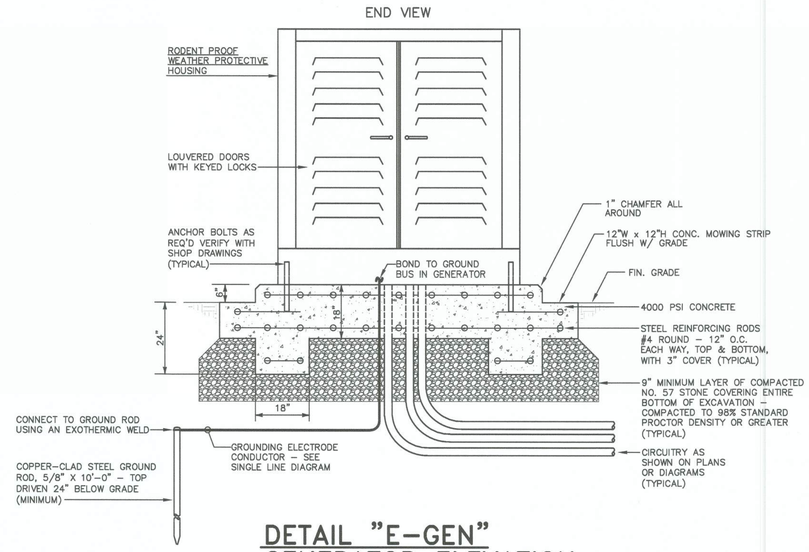

DETAIL "E-GEN"
GENERATOR ELEVATION

SCALE : NONE

DETAIL NOTES
1. ALL DIMENSIONS SHOWN ARE TYPICAL AND MINIMUM. ADDITIONALLY, CONTRACTOR SHALL SIZE CONCRETE PAD SUCH THAT THE TOTAL PAD WEIGHT (AT AN ASSUMED CONCRETE DENSITY OF 150 LBS/CUBIC FOOT) IS A MINIMUM OF 1.5 TIMES THE TOTAL GENERATOR SET WEIGHT (INCLUDING ENCLOSURE(S), ACCESSORIES, FUEL, OIL, ETC.).
2. PROVIDE VIBRATION ISOLATORS, SPRING & PAD TYPE, QUANTITY AS RECOMMENDED BY THE GENERATOR SET MANUFACTURER TO MOUNT GENERATOR SET. ISOLATORS SHALL INCLUDE SEISMIC RESTRAINTS IF REQUIRED BY SITE LOCATION.

SEE NOTE 1

NOTES THIS SHEET ONLY
1. THIS WORK IS PART OF ADDITIVE ALTERNATE NO. 1. SEE ADDITIVE ALTERNATE SUMMARY NOTE 1 ON SHEET E1.

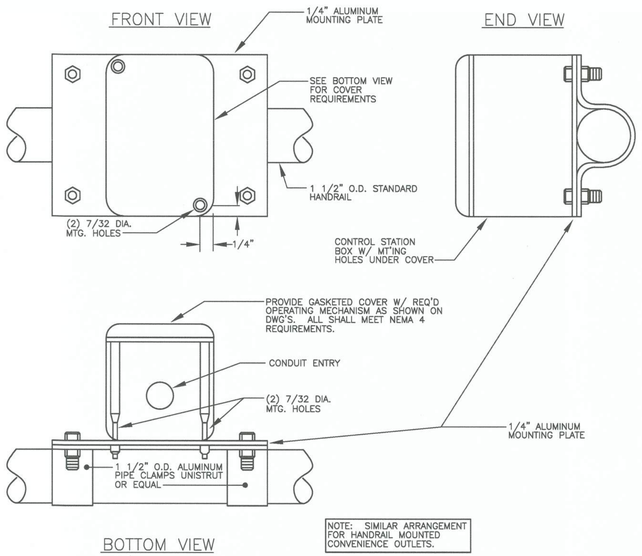

DETAIL "E-HR"
NEMA 4 HANDRAIL MOUNTING

SCALE : NONE

ELECTRICAL DETAILS LEGEND	
E-SRS	E-GEN
E-HR	

JACKSON, RENFRO & ASSOCIATES, INC.
ELECTRICAL ENGINEERING & DESIGN
21 INVERNESS CENTER PKWY • SUITE 300 • BIRMINGHAM, AL • 35242
PHILIP D. BLACK, PE
phil@jrae.com
(D) 205.536.7120
(F) 205.995.1078
JRA JOB NO. 223096

ALABAMA LICENSED No. 27420 PROFESSIONAL ENGINEER PHILIP D. BLACK 6/30/2023

REVISIONS			
#	DESCRIPTION	DATE	BY
1			
2			
3			
4			
5			
6			

ELECTRICAL DETAILS
WEDOWEE SEWER SYSTEM IMPROVEMENTS
WEDOWEE WATER, SEWER, & GAS BOARD
TOWN OF WEDOWEE
RANDOLPH COUNTY, ALABAMA

THE KELLEY GROUP
• A CIVIL ENGINEERING COMPANY •
850 Corporate Pwky, Suite 104 Birmingham, Alabama 35242
301 N Dickson St, Tuscumbia, AL 35674

ATTENTION:
THIS BAR = 1 INCH ON ORIGINAL DRAWING. ADJUST SCALE IF THIS BAR ≠ 1 INCH.
1"

PROJECT NO: 20-0016
DRAWN BY: ZJG
CHECKED BY: PDB
SCALE: AS NOTED
DATE: 6/30/2023

SHEET NO.
E32

Z:\CAD\DWG\223096\E32.(DETAILS).DWG

6/30/2023 3:31:02 PM

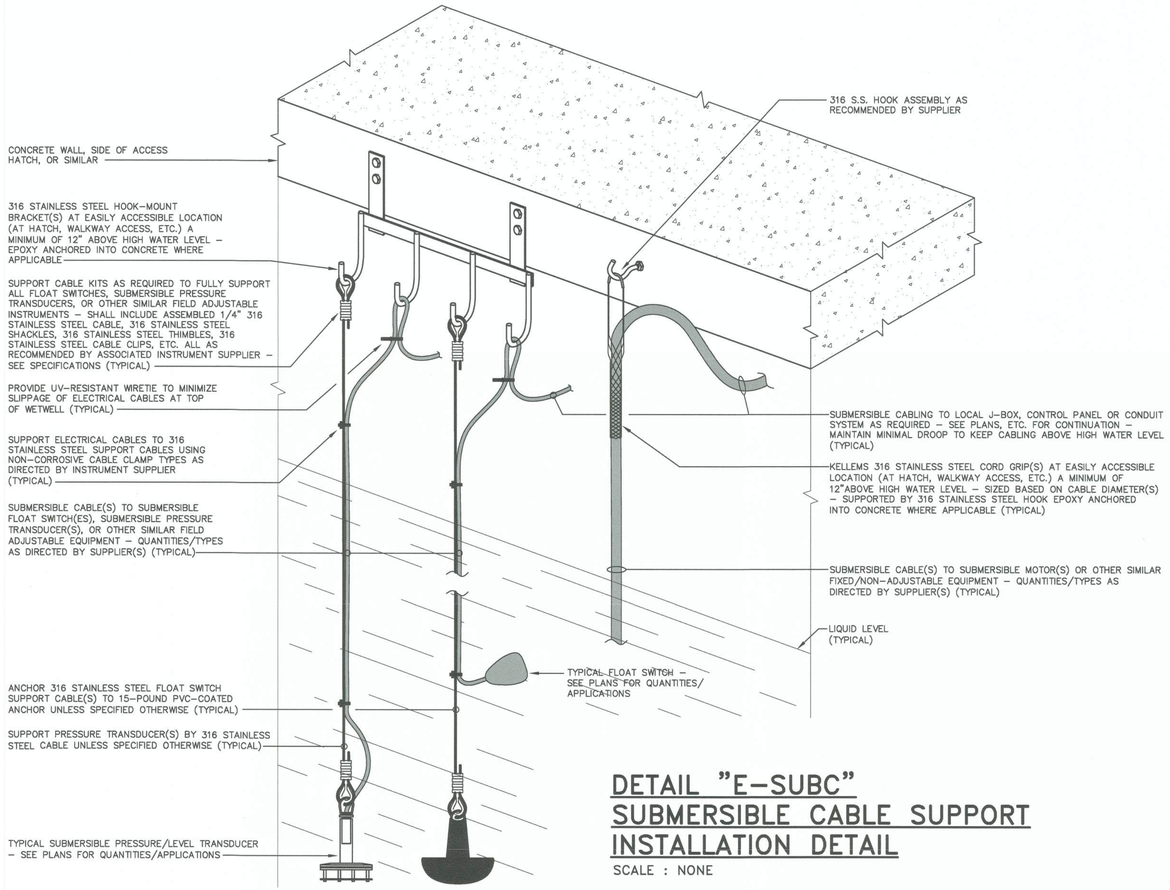

DETAIL "E-SUBC"
SUBMERSIBLE CABLE SUPPORT INSTALLATION DETAIL
SCALE : NONE

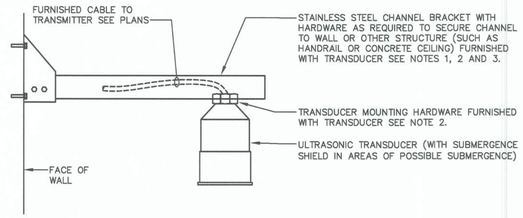

DETAIL "E-UTW"
TYPICAL ULTRASONIC LEVEL TRANSDUCER WALL-MOUNT INSTALLATION DETAIL
SCALE : NONE

DETAIL NOTES

1. INSTALLATION SHOWN IS TYPICAL. EXACT REQUIREMENTS SHALL BE DETERMINED BY APPROVED MANUFACTURER'S SHOP DRAWINGS.
2. CONTRACTOR SHALL COORDINATE ALL EQUIPMENT MOUNTING HARDWARE REQUIREMENTS WITH INTRUMENTATION PROVIDER.
3. DETAIL BASED ON TYPICAL WALL MOUNTED CHANNEL BRACKET. HANDRAIL MOUNTED BRACKETS SHALL BE CONNECTED TO AN ALUMINUM BACKPLATE SECURED TO TWO HORIZONTAL HANDRAIL MEMBERS.
4. TRANSDUCER SHALL BE LOCATED AS REQUIRED TO AVOID OBSTRUCTIONS INTERFERING WITH THE ULTRASONIC BEAMSPREAD AND TO PROVIDE PROPER MEASUREMENT OF THE ASSOCIATED LEVEL PER THE RECOMMENDATIONS OF THE TRANSDUCER SUPPLIER. TRANSDUCER MOUNTING HEIGHT SHALL BE ABOVE PEAK LEVEL OF MEASURED MEDIA, AT HEIGHT AS APPROVED BY CIVIL ENGINEER PRIOR TO START OF WORK.

REVISIONS			
#	DESCRIPTION	DATE	BY
1			
2			
3			
4			
5			
6			

ELECTRICAL DETAILS

WEDOWEE SEWER SYSTEM IMPROVEMENTS
WEDOWEE WATER, SEWER, & GAS BOARD
TOWN OF WEDOWEE
RANDOLPH COUNTY, ALABAMA

THE KELLEY GROUP
• A CIVIL ENGINEERING COMPANY •
850 Corporate Pwky, Suite 104 Birmingham, Alabama 35242
301 N Dickson St, Tuscumbia, AL 35674

ATTENTION:
THIS BAR = 1 INCH ON ORIGINAL DRAWING. ADJUST SCALE IF THIS BAR ≠ 1 INCH.

PROJECT NO: 20-0016
DRAWN BY: ZJG
CHECKED BY: PDB
SCALE: AS NOTED
DATE: 6/30/2023

SHEET NO.
E33

ELECTRICAL DETAILS LEGEND

E-SUBC	E-SUBC

ALABAMA LICENSED No. 27420 PROFESSIONAL ENGINEER PHILIP D. BLACK
6/30/2023

JACKSON, RENFRO & ASSOCIATES, INC.
ELECTRICAL ENGINEERING & DESIGN
31 INVERNESS CENTER PKWY • SUITE 300 • BIRMINGHAM, AL • 35242
PHILIP D. BLACK, PE
phil@jraee.com
(O) 205.536.7120
(F) 205.995.1078
JRA JOB NO. 223096

Z:\CAD\DWG\223096\E33 (DETAILS).DWG