BID SET

ENGINEERING PLANS
FOR
ARPA
2022 SEWER INFRASTRUCTURE IMPROVEMENTS
CONTRACT 1
TREATMENT AND COLLECTION SYSTEM IMPROVEMENTS
CWSRF PROJECT No. CS010864-02
FOR THE
CITY OF BRUNDIDGE, ALABAMA

MAYOR
ISABELL BOYD

CITY COUNCIL

GERALD HOLLAND	DISTRICT 1
LATISHER HALL	DISTRICT 2
MARGARET ROSS	DISTRICT 3
BYRON GAYNOR	DISTRICT 4
MARILYN RODGERS	DISTRICT 5

CITY MANAGER
WILLIE WRIGHT

REVISED JULY 2025
SEPTEMBER 2024
Job No. 14-203

PREPARED BY
POLY, INC.

ALABAMA LICENSED NO. 15562 PROFESSIONAL ENGINEER MAX A. MOBLEY
7-16-25

POLY

Revision	Description	Date

DESIGNED BY: M.A.M.
DRAWN BY: B.J.
DATE: MAY 2025
ENG / ARCH / SURVEYOR OF RECORD: REGISTRATION No.

	Cert. of Auth. No.		
ARCHITECT	CA-0480	AA-C001050	001118
ENGINEER	CA-783-E	CA-1488	001118

These drawings are copyrighted and the property of Poly-Inc. Any use, partial or full reproduction is prohibited without written Agreement with Poly-Inc.

POLY, INC.
1935 Headland Avenue
Dothan, AL 36303
334-793-4700
102 Sunset Lane 117 Gemini Cir., Ste. 416
Shalimar, FL 32579 Birmingham, AL 35209
850-609-1100 205-913-0330
WWW.POLY-INC.COM

ARPA 2022 SEWER INFRASTRUCTURE IMPROVEMENTS
CONTRACT 1
TREATMENT AND COLLECTION SYSTEM IMPROVEMENTS
CWSRF PROJECT No. CS010864-02
FOR THE
CITY OF BRUNDIDGE, ALABAMA

COVER SHEET

SHEET No.

PROJECT No. 14-203

Poly, Inc. - G:\CLEANSTUFF-10-14\14203 ARPA Water and Sewer Improvements\WIP\01-GENERAL\WWTP\CONT 1 SYSTEM IMPROV\14203_G-0 COVER.dwg [COVER] Last Printed: July 16, 2025 - 10:53am By: JPeaden

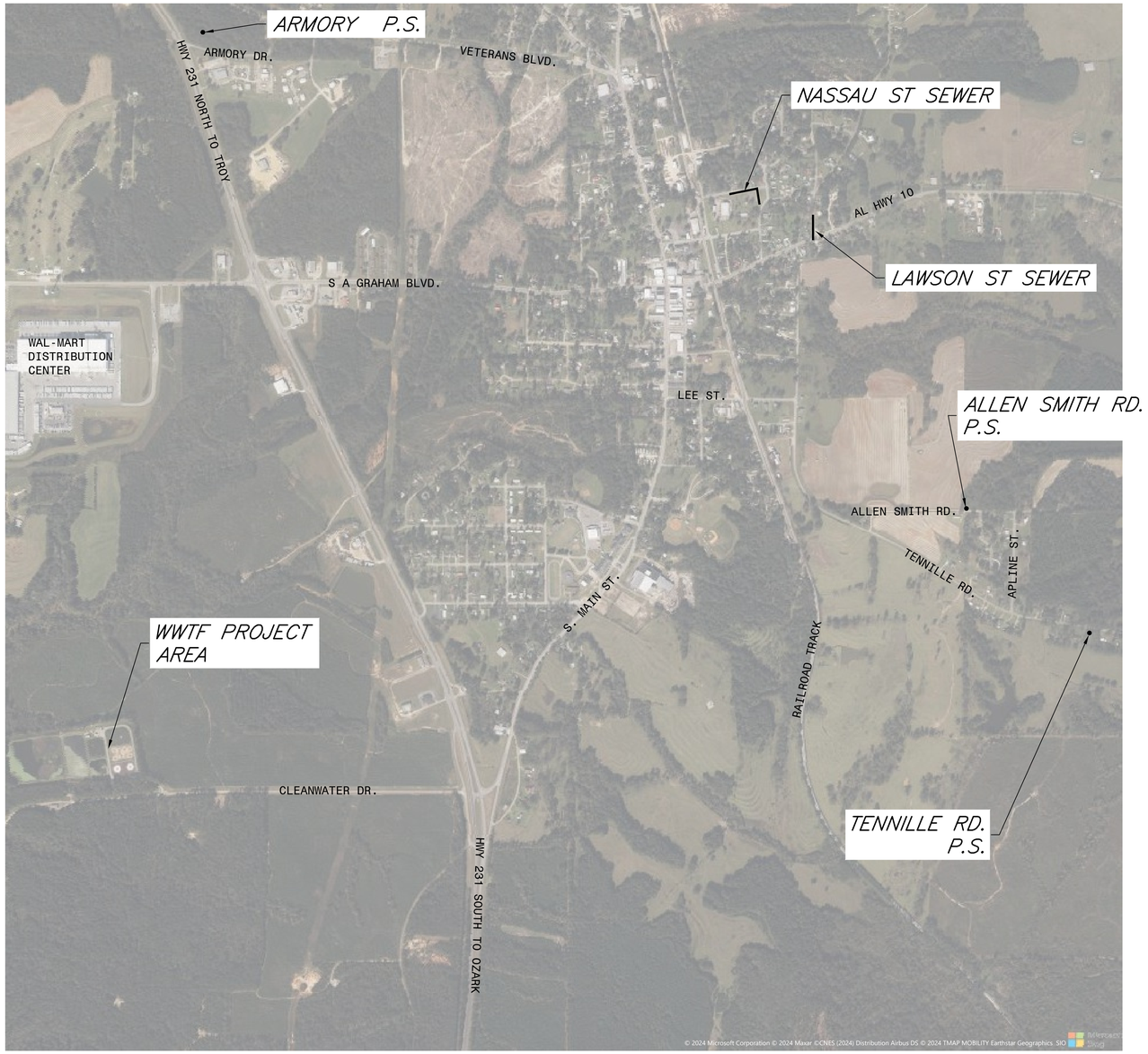

VICINITY MAP

SCALE: 1" = 400'

INDEX OF SHEETS

COVER SHEET
G-1 VICINITY MAP, DRAWING INDEX, LEGEND, AND ABBREVIATIONS
G-2 OVERALL IMPROVEMENTS
C-01 RAS PUMP STATION PLAN
C-02 RAS PUMP STATION DETAILS
C-03 ORIGINAL (1979) RECIRCULATION PUMP STATION DETAIL
C-04 RECIRCULATION PUMP STATION DEMOLITION
C-05 RECIRCULATION PUMP STATION MODIFICATION DETAIL
C-06 PIPING MODIFICATIONS
C-07 ALLEN ROAD PUMP STATION
C-08 ARMORY PUMP STATION
C-09 TENNILLE RD. PUMP STATION
C-10 LAWSON ST & NASSAU ST. SEWER PLAN & PROFILE
C-11 SEWER DETAILS
C-12 WATER DETAILS
C-13 FENCE DETAILS
C-14 TRAFFIC CONTROL SIGNAGE
E-01 ELECTRICAL LEGEND, NOTES & ABBREVIATIONS
E-02 OVERALL ELECTRICAL SITE PLAN
E-03 ENLARGED SITE PLAN RAS PUMP STATION
E-04 POWER RISER DIAGRAM

LEGEND

EXISTING

WATER MAIN
DRAINAGE PIPE
EXISTING SEWER
EXISTING GAS LINE
FIRE HYDRANT
WATER VALVE
WATER METER
MANHOLE
SIGN
LIGHT POLE
UTILITY POLE
GUY WIRE
YARD LIGHT
TELEPHONE BOX
MAILBOX
TREE
BUSH / SHRUB

EXISTING IRON PIN (SIZE & TYPE AS SHOWN)
R.O.W. MONUMENT (SIZE AS SHOWN)
CONTROL POINT
CHAIN LINK FENCE
RAILROAD TRACK
EXISTING TREELINE
ASPHALT
CONCRETE
DIRT
GRAVEL

ABBREVIATIONS

ASPH	ASPHALT
CLAY	VITRIFIED CLAY PIPE
CMT	CREPE MYRTLE TREE
CONC	CONCRETE
CP	CONTROL POINT
DIP	DUCTILE IRON PIPE
E	EASTING
EIP	EXISTING IRON PIN
EL	ELEVATION
EX	EXISTING
FH	FIRE HYDRANT
GV	GAS VALVE
GW	GUY WIRE
INV	INVERT
LF	LINEAR FEET
MB	MAILBOX
MH	MANHOLE
MIN	MINIMUM
MJ	MECHANICAL JOINT
N	NORTHING
NTS	NOT TO SCALE
OCEW	ON CENTER EACH WAY
OT	OAK TREE
OTP	OPEN TOP PIPE
PCT	PECAN TREE
PP	POWER POLE
PVC	POLYVINYL CHLORIDE PIPE
REQ	REQUIRED/PROPOSED
RJ	RESTRAINED JOINT
SIP	SET IRON PIN
SP	SERVICE POLE
SSMH	SANITARY SEWER MANHOLE
STA	STATION
TP	TELEPHONE POLE
WM	WATER METER
WV	WATER VALVE
W/	WITH
W/O	WITHOUT
YL	YARD LIGHT
Ø	DIAMETER

ALABAMA LICENSED MAX A. MOBLEY
NO. 11562 PROFESSIONAL
7-16-25

Revision	Description	Date

DESIGNED BY: M.A.M.
DRAWN BY: B.J.
DATE: MAY 2025

ENG / ARCH / SURVEYOR OF RECORD	Cert. of Auth. No.	REGISTRATION No.
ARCHITECT	CA-0480	AA-C001053
ENGINEER	CA-782-E	CA-1818
	AL	FL GA
	001118	001118
	001118	

These drawings are copyrighted and the property of Poly-Inc. Any use, partial or full reproduction is prohibited without written Agreement with Poly-Inc.

POLY, INC.
1935 Headland Avenue
Dothan, AL 36303
334-793-4700
102 Sunset Lane 117 Gemini Cir., Ste. 416
Shalimar, FL 32579 Birmingham, AL 35209
850-609-1100 205-913-0330
WWW.POLY-INC.COM

ARPA 2022 SEWER INFRASTRUCTURE IMPROVEMENTS
CONTRACT 1
TREATMENT AND COLLECTION SYSTEM IMPROVEMENTS
CWSRF PROJECT No. C5010804-02
FOR THE
CITY OF BRUNDIDGE, ALABAMA

VICINITY MAP, DRAWING INDEX, LEGEND, AND ABBREVIATIONS

SHEET No.
G-1
PROJECT No.
14-203

Poly, Inc. - G:\CLEANSTUFF-10-14\14203 ARPA Water and Sewer Improvements\WIP\01-GENERAL\WWTPCONT 1 SYSTEM IMPROV\14203_G-1 INDEX.dwg [G-1] Last Printed: July 16, 2025 - 10:55am By: JPeaden

ALABAMA REGISTERED PROFESSIONAL ENGINEER
NO. 15562
MAX A. MOBLEY
7-16-25

POLY

Revision	Description	Date

DESIGNED BY: MAM
DRAWN BY: JDP
DATE: MAY 2025
ENG / ARCH / SURVEYOR OF RECORD: REGISTRATION No.

Cert. of Auth. No.		
ARCHITECT	CA-1480	AA-C001555
ENGINEER	CA-78-E	CA-1818

These drawings are copyrighted and the property of Poly-Inc. Any use, partial or full reproduction is prohibited without written Agreement with Poly-Inc.

POLY, INC.
1935 Headland Avenue
Dothan, AL 36303
334-793-4700
102 Sunset Lane
Shalimar, FL 32579
850-609-1100
117 Gemini Cir., Ste. 416
Birmingham, AL 35209
205-913-0330
WWW.POLY-INC.COM

ARPA 2022 SEWER INFRASTRUCTURE IMPROVEMENTS
CONTRACT 1
TREATMENT AND COLLECTION SYSTEM IMPROVEMENTS
CWSRF PROJECT No. S2501008H-02
FOR THE
CITY OF BRUNDIDGE, ALABAMA

OVERALL IMPROVEMENTS

SHEET No.
G-2

PROJECT No.
14-203

Poly, Inc. - G:\CLEANSTUFF-10-14\14203 ARPA Water and Sewer Improvements\WIP\01-GENERAL\WWTP\CONT 1 SYSTEM IMPROV\14203_G-2_OVERALL IMPROVEMENTS.dwg [Layout1] Last Printed: July 16, 2025 - 10:56am By: JPeaden

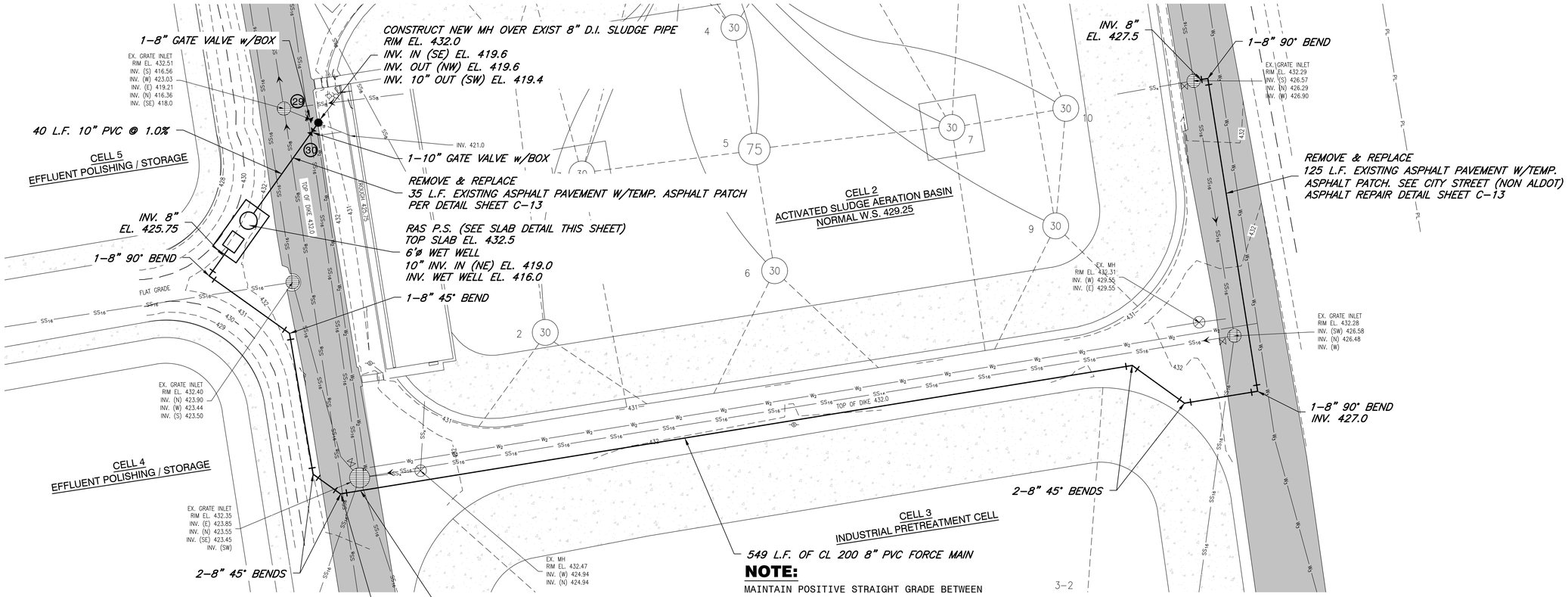

NOTE:

MAINTAIN POSITIVE STRAIGHT GRADE BETWEEN INVERT CALLOUTS

VALVE SCHEDULE			
No.	DSCRIPTION	NORMAL POSITION	REMARKS
29	8" GATE VALVE	CLOSED	OPEN TO WASTE SLUDGE
30	10" GATE VALVE	OPEN	CLOSE TO WASTE SLUDGE

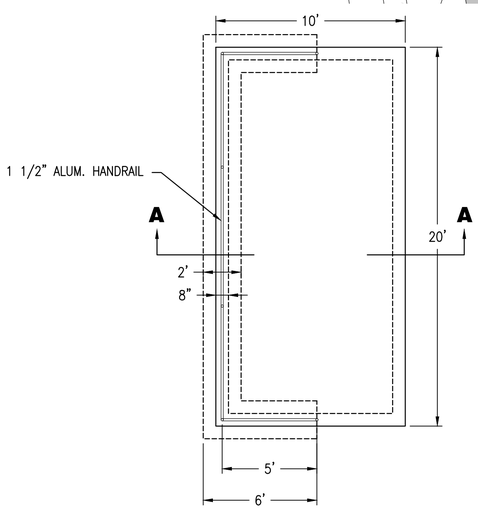

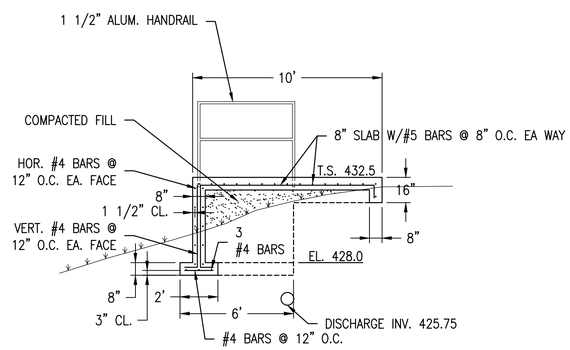

SECTION A-A

RAS PUMP STATION SLAB

SCALE: 1" = 4'

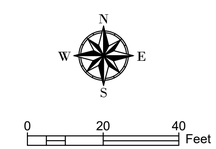

ALABAMA LICENSED PROFESSIONAL ENGINEER MAX A. MOBLEY NO. 31562 7-16-25

POLY

Revision	Description	Date

DATE: MAY 2025

DRAWN BY: JDP

DESIGNED BY: MAM

ENG / ARCH / SURVEYOR OF RECORD:	REGISTRATION No.		
Cert. of Auth. No.	FL	GA	
ARCHITECT	CA-0480	AA-C000350	00/1/18
ENGINEER	CA-78-E	CA-1818	00/1/18

These drawings are copyrighted and the property of Poly-Inc. Any use, partial or full reproduction is prohibited without written Agreement with Poly-Inc.

POLY, INC.
1935 Headland Avenue
Dothan, AL 36303
334-793-4700
102 Sunset Lane
Shallmar, FL 32579
850-609-1100
117 Gemini Cir., Ste. 416
Birmingham, AL 35209
205-913-0330
WWW.POLY-INC.COM

ARPA 2022 SEWER INFRASTRUCTURE IMPROVEMENTS
CONTRACT 1
TREATMENT AND COLLECTION SYSTEM IMPROVEMENTS
CWSRF PROJECT No. C5017-0804-02
FOR THE
CITY OF BRUNDIDGE, ALABAMA

RAS
PUMP STATION
PLAN

SHEET No.
C-01

PROJECT No.
14-203

Poly, Inc. - G:\CLEANSTUFF-10-14\14203 ARPA Water and Sewer Improvements\WIP\03-CIVIL\WWTP\CONT 1 SYSTEM IMPROVEMENTS\14203_02_C-01_RAS PS PLAN.dwg [C-01] Last Printed: July 16, 2025 - 10:58am By: JPeaden

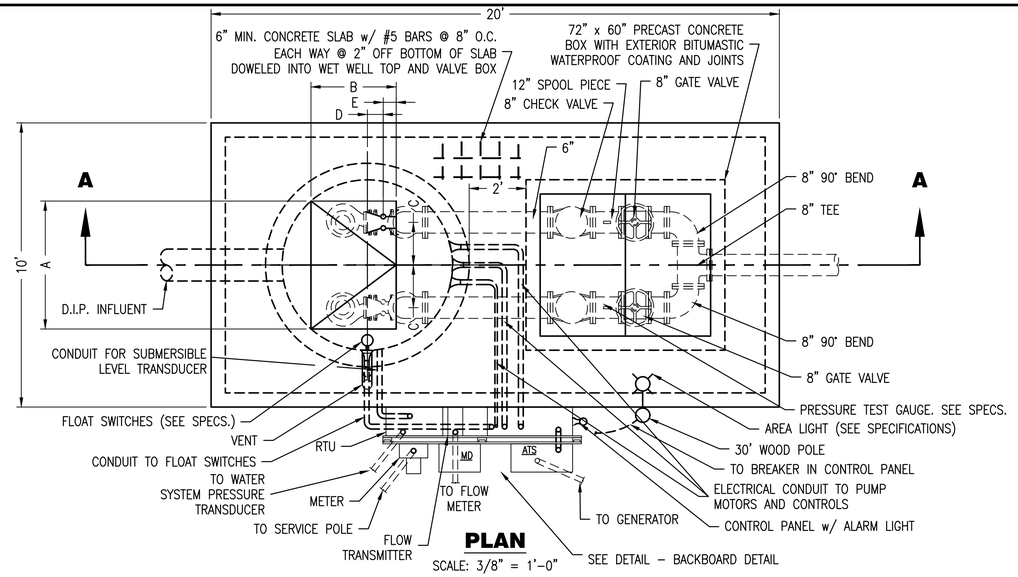

PLAN

SCALE: 3/8" = 1'–0"

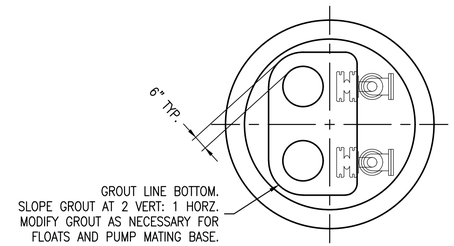

GROUT DETAIL

NOT TO SCALE

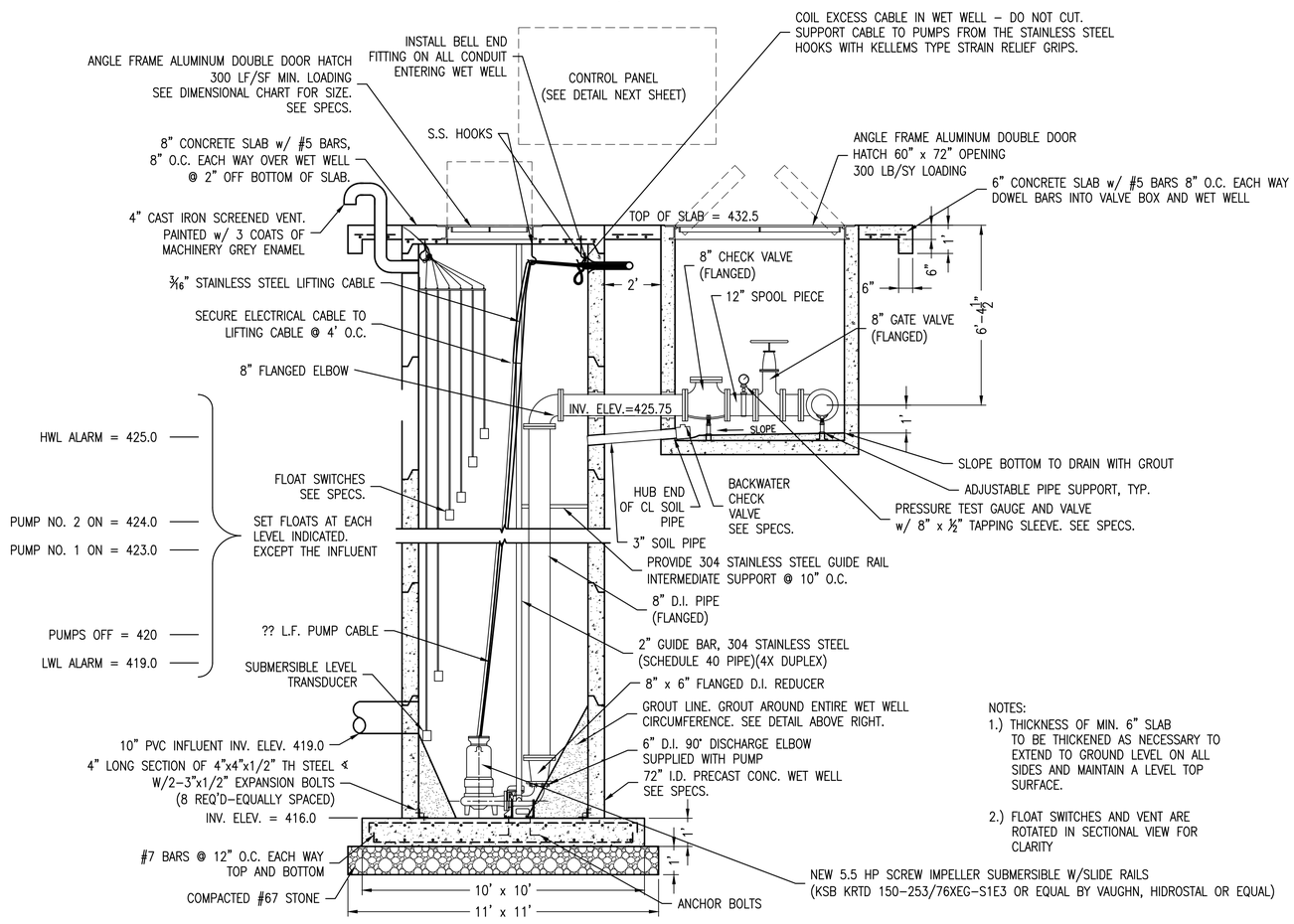

SECTION "A - A"

SCALE: 3/8" = 1'–0"

NOTES:

1.) THICKNESS OF MIN. 6" SLAB TO BE THICKENED AS NECESSARY TO EXTEND TO GROUND LEVEL ON ALL SIDES AND MAINTAIN A LEVEL TOP SURFACE.

2.) FLOAT SWITCHES AND VENT ARE ROTATED IN SECTIONAL VIEW FOR CLARITY

SPECIFICATIONS

PUMP DATA				MOTOR DATA		
PUMP STATION NAME	CAP. G.P.M.	T.D.H.	R.P.M.	H.P.	VOLTS	PHASES
RAS	520	12	1200	5.5	460	3

DIMENSIONAL CHART				
STATION				
A*	B*	C	D	E
54	36	18	6.6875	5.5

ALL DIMENSIONS IN INCHES
BASED UPON HYDROMATIC PUMPS
*MINIMUM OPENING DIMENSIONS

ALABAMA LICENSED NO. 15562 PROFESSIONAL 7-16-25 MAX A. MOBLEY

POLY

Revision	Description	Date

DESIGNED BY: | DRAWN BY: | DATE: MAY 2025

ENG / ARCH / SURVEYOR OF RECORD: REGISTRATION No.

	Cert. of Auth. No.		
ARCHITECT	CA-0480	AL	AA-C001051 001118
ENGINEER	CA-78-E	FL	CA-1818 001118

These drawings are copyrighted. Reproduction of Poly-Inc. Any use, partial or full reproduction is prohibited without written permission. Agreement with Poly-Inc.

POLY, INC.
1935 Headland Avenue
Dothan, AL 36303
334-793-4700
102 Sunset Lane 117 Gemini Cir., Ste. 416
Shalimar, FL 32579 Birmingham, AL 35209
850-609-1100 205-913-0330
WWW.POLY-INC.COM

ARPA 2022 SEWER INFRASTRUCTURE IMPROVEMENTS
CONTRACT 1
TREATMENT AND COLLECTION SYSTEM IMPROVEMENTS
CWSRF PROJECT No. C5010084-02
FOR THE
CITY OF BRUNDIDGE, ALABAMA

RAS
PUMP STATION

SHEET No.
C-02

PROJECT No.
14-203

Poly, Inc. - G:\CLEANSTUFF-10-14\14203 ARPA Water and Sewer Improvements\WIP\03-CIVIL\WWTP\CONT 1 SYSTEM IMPROVEMENTS\14203_02_C-02 RAS PS DETAIL.dwg [C-02] Last Printed: July 16, 2025 - 10:59am By: JPeaden

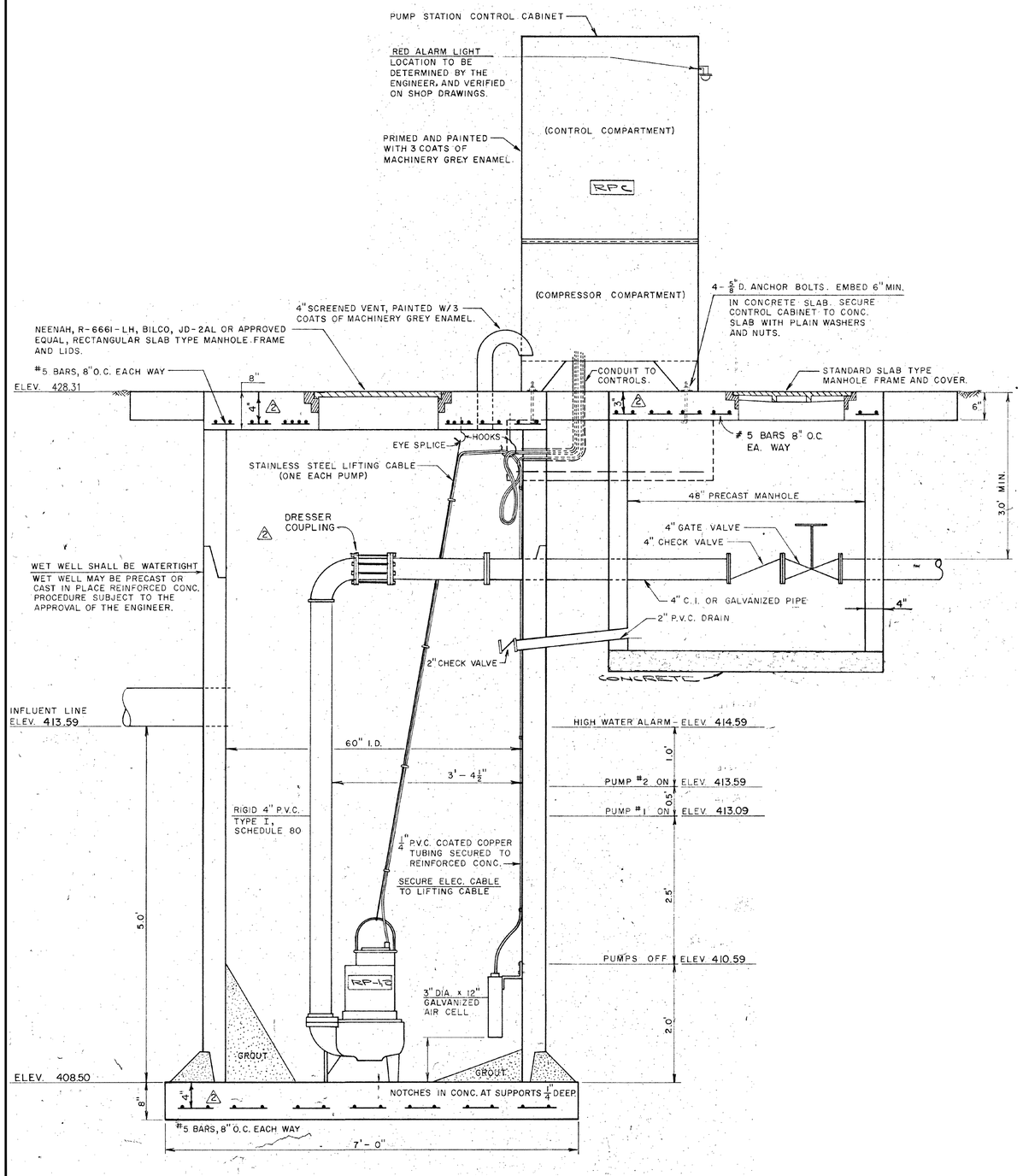

ORIGINAL (1979) RECIRCULATION PUMP STATION

EXISTING RECIRCULATION PUMP STATION

NOT TO SCALE

REMOVE ALL EXISTING PUMPS, PIPING, VALVES, CONTROL PANELS AND APPURTENANCES NOT TO BE RETAINED

EXISTING RECIRCULATION PUMP STATION

NOT TO SCALE

REMOVE EXIST 8"x6" INCREASER AND TIE NEW 8" PIPING TO EXIST. 8"

ALABAMA LICENSED PROFESSIONAL ENGINEER MAX A. MOBLEY NO. 11562 7-16-25

Revision	Description	Date

DESIGNED BY: MAM | DRAWN BY: JDP | DATE: MAY 2025

ENG / ARCH / SURVEYOR OF RECORD	Cert. of Auth. No.	REGISTRATION No.
ARCHITECT CA-0480	AL AA-C001053 001118	FL GA
ENGINEER CA-782E	CA-1818 001118	

These drawings are copyrighted and the property of Poly-Inc. Any use, partial or full reproduction is prohibited without written consent with Poly-Inc. Agreement with Poly-Inc.

POLY, INC.
1935 Headland Avenue
Dothan, AL 36303
334-793-4700
102 Sunset Lane 117 Gemini Cir., Ste. 416
Shalimar, FL 32579 Birmingham, AL 35209
850-609-1100 205-913-0330
WWW.POLY-INC.COM

ARPA 2022 SEWER INFRASTRUCTURE IMPROVEMENTS
CONTRACT 1
TREATMENT AND COLLECTION SYSTEM IMPROVEMENTS
CWSRF PROJECT No. C301804-02
FOR THE
CITY OF BRUNDIDGE, ALABAMA

ORIGINAL (1979) RECIRCULATION PUMP STATION DETAIL

SHEET No.
C-03

PROJECT No.
14-203

Poly, Inc. - G:\CLEANSTUFF-10-14\14203 ARPA Water and Sewer Improvements\WIP\03-CIVIL\WTP\CONT 1 SYSTEM IMPROVEMENTS\14203_02_C-03_EX RECIR PS DETAIL.dwg [RECIRCULATION PS C-3] Last Printed: July 16, 2025 - 11:04am By: JPeaden

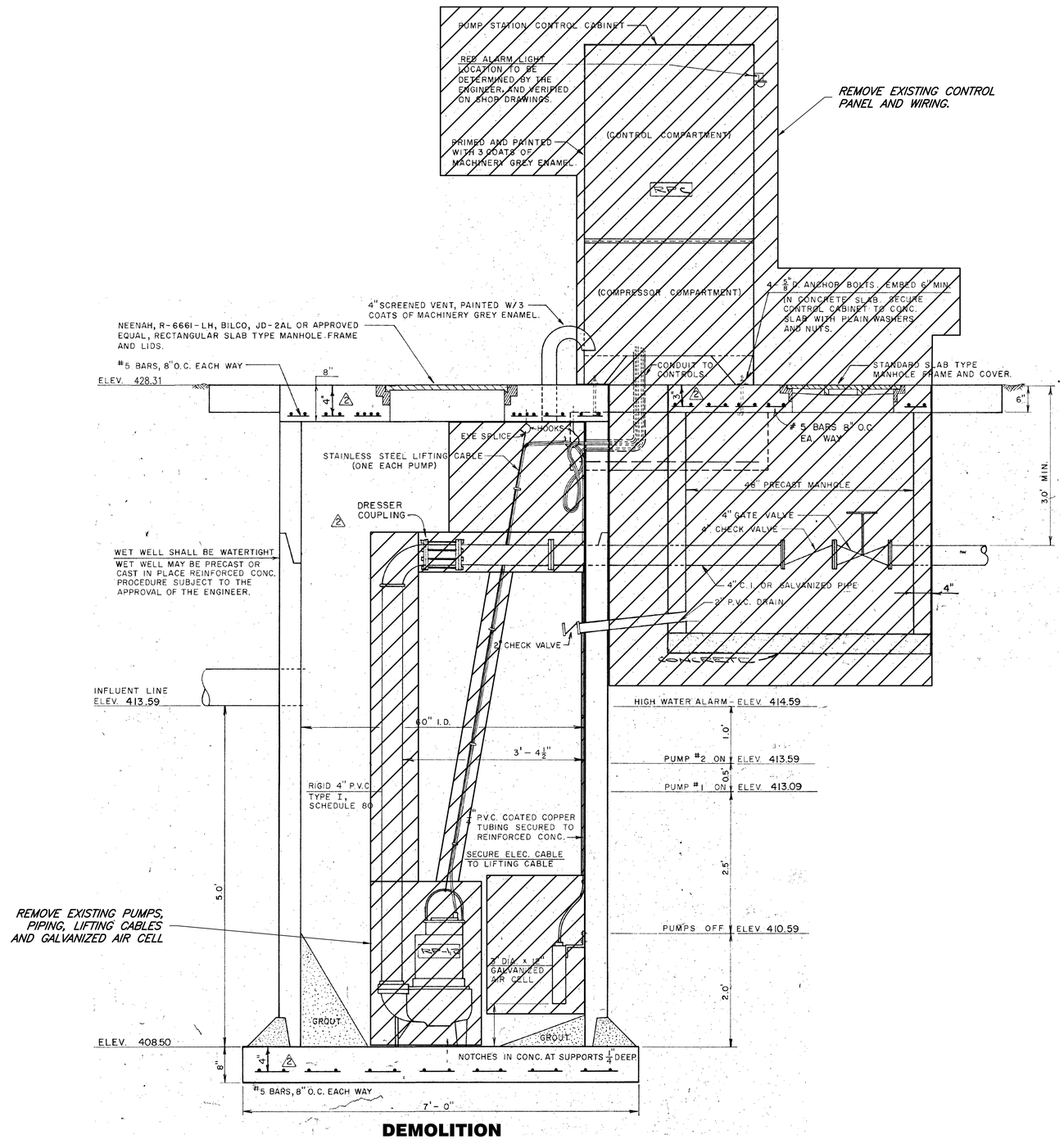

DEMOLITION
RECIRCULATION PUMP STATION

NOT TO SCALE

ALABAMA LICENSED NO. 19562 PROFESSIONAL ENGINEER MAX A. MOBLEY
7-16-25

POLY

Date	Description	Revision

DESIGNED BY: MAM
DRAWN BY: JDP
DATE: MAY 2025
ENG / ARCH / SURVEYOR OF RECORD: REGISTRATION No.
Cert. of Auth. No. AL FL GA
ARCHITECT GA-0480 AA-C001051 001118
ENGINEER GA-78-E GA-1818 001118

These drawings are copyrighted by property of Poly-Inc. Any use, partial or full reproduction is prohibited without written Agreement with Poly-Inc.

POLY, INC.
1935 Headland Avenue
Dothan, AL 36303
334-793-4700
102 Sunset Lane 117 Gemini Cir., Ste. 418
Shalimar, FL 32579 Birmingham, AL 35209
850-609-1100 205-913-0330
WWW.POLY-INC.COM

ARPA 3022 SEWER INFRASTRUCTURE IMPROVEMENTS
CONTRACT 1
TREATMENT AND COLLECTION SYSTEM IMPROVEMENTS
OWSRF PROJECT No. C5010884-02
FOR THE
CITY OF BRUNDIDGE, ALABAMA

DEMOLITION
RECIRCULATION PUMP STATION

SHEET No.
C-04
PROJECT No.
14-203

Poly, Inc. - G:\CLEANSTUFF-10-14\14203 ARPA Water and Sewer Improvements\WIP\03-CIVIL\WWTP\CONT 1 SYSTEM IMPROVEMENTS\14203_02_C-04_EX RECIR DEMOLITION.dwg [C-04] Last Printed: July 16, 2025 - 11:05am By: JPeaden

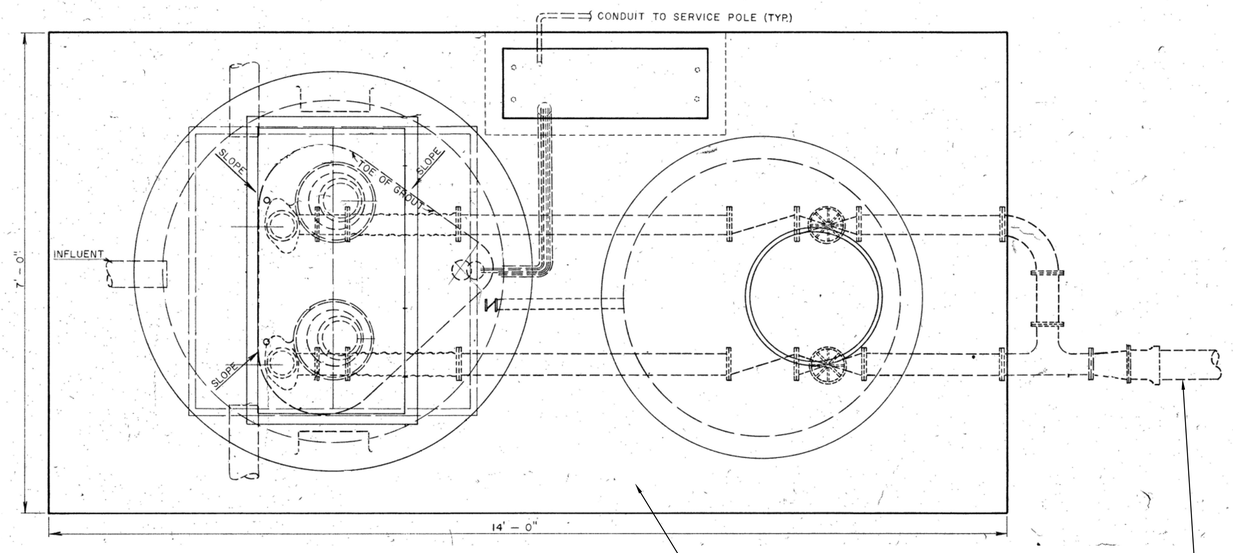

REMOVE & REPLACE
6"x7'x14' CONCRETE SLAB AROUND WET WELL
AND VALVE BOX (IN–KIND)
(No. 5 BARS @ 8" O.C. EA. WAY)
CONFIGURE NEW SLAB PER VAUGHN

TIE NEW 8" DISCHARGE TO
EXISTING 8" FORCE MAIN

RECIRCULATION PUMP STATION SLAB

NOT TO SCALE

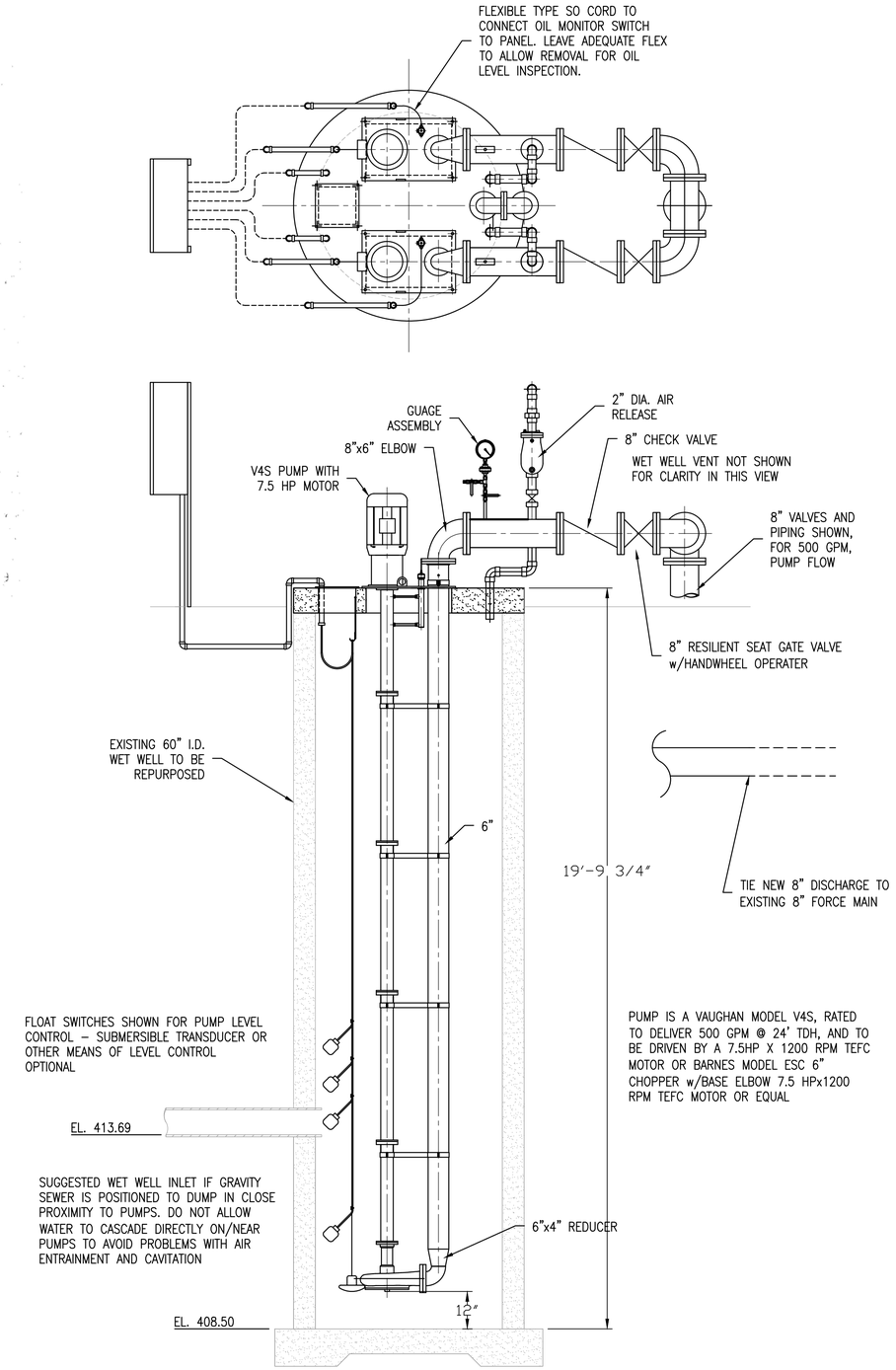

MODIFICATIONS TO RECIRCULATION PUMP STATION

NOT TO SCALE

ALABAMA
LICENSED
No. 15562
PROFESSIONAL
ENGINEER
MAX A. MOBLEY
7-16-25

POLY

Revision	Description	Date

DATE: MAY 2025
DRAWN BY: JDP
DESIGNED BY: MAM
REGISTRATION No.
RECORD:
ENG / ARCH / SURVEYOR OF RECORD:

Cert. of Auth. No.		
ARCHITECT	CA-0480	AA-C000350
ENGINEER	CA-784-E	CA-1818

AL		
FL	GA	
30/118		
30/118		

These drawings are copyrighted as the property of Poly-Inc. Any use, partial or full reproduction is prohibited without written Agreement with Poly-Inc.

POLY, INC.
1935 Headland Avenue
Dothan, AL 36303
334-793-4700
102 Sunset Lane
Shalimar, FL 32579
850-609-1100
117 Gemini Cir., Ste. 416
Birmingham, AL 35209
205-913-0330
WWW.POLY-INC.COM

ARPA 2022 SEWER INFRASTRUCTURE IMPROVEMENTS
CONTRACT 1
TREATMENT AND COLLECTION SYSTEM IMPROVEMENTS
CWSRF PROJECT No. C501804-02
FOR THE
CITY OF BRUNDIDGE, ALABAMA

RECIRCULATION
PUMP STATION
MODIFICATION DETAIL

SHEET No.
C-05

PROJECT No.
14-203

Poly, Inc. - G:\CLEANSTUFF-10-14\14203 ARPA Water and Sewer Improvements\WIP\03-CIVIL\WWTP\CONT 1 SYSTEM IMPROVEMENTS\14203_02_C-05_RECIR PS MODIF.dwg [RECIRCULATION PS C-5] Last Printed: July 16, 2025 - 11:08am By: JPeaden

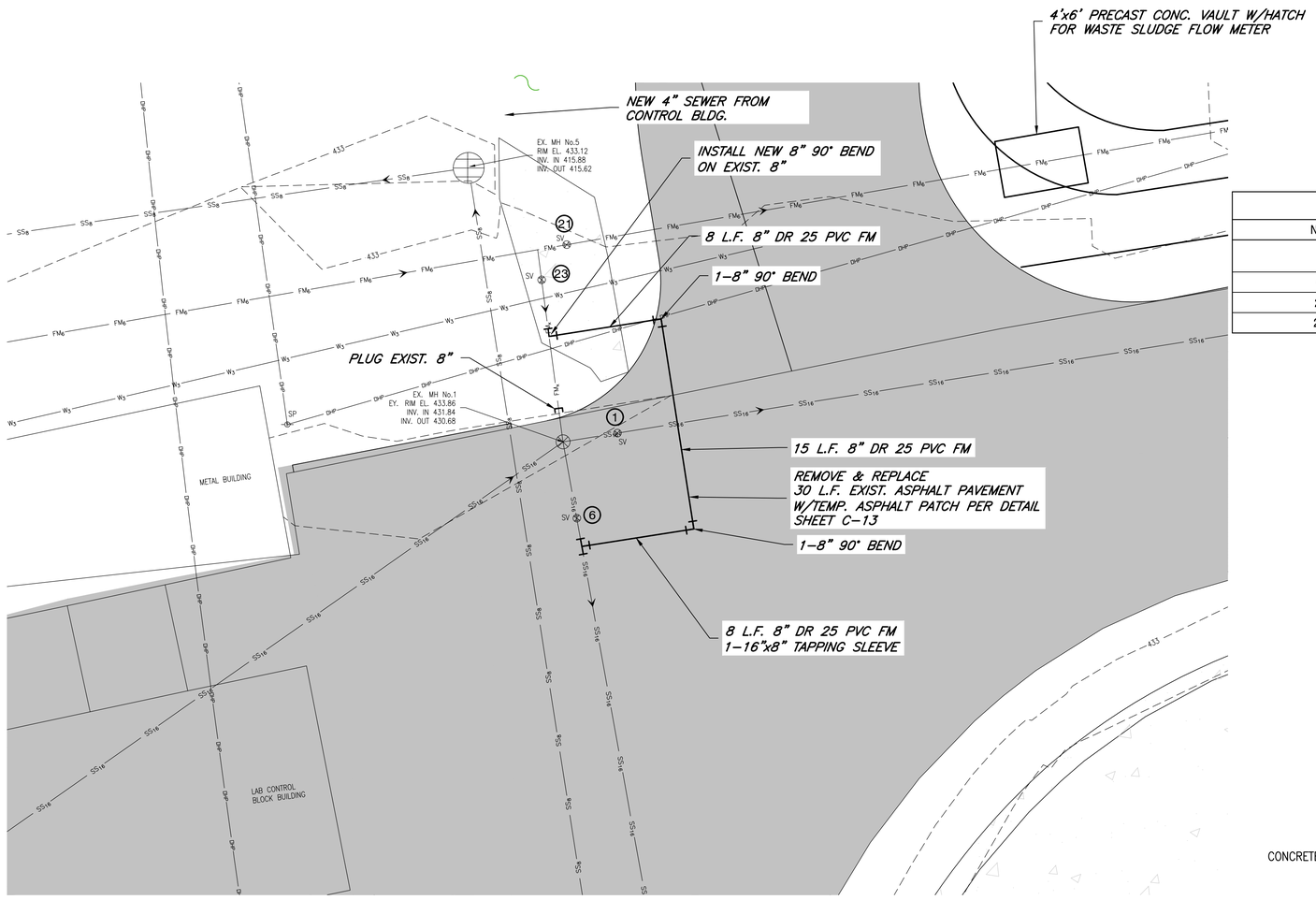

VALVE SCHEDULE

No.	DSCRIPTION	NORMAL POSITION	REMARKS
1	EX. 16" BUTTERFLY VALVE	OPEN	
6	EX. 6" BUTTERFLY VALVE	CLOSED	
21	EX. 6" GATE VALVE	OPEN	CLOSE TO RECIRCULATE FLOW TO CELL 2
23	EX. 8" GATE VALVE	CLOSED	OPEN TO RECIRCULATE FLOW TO CELL 2

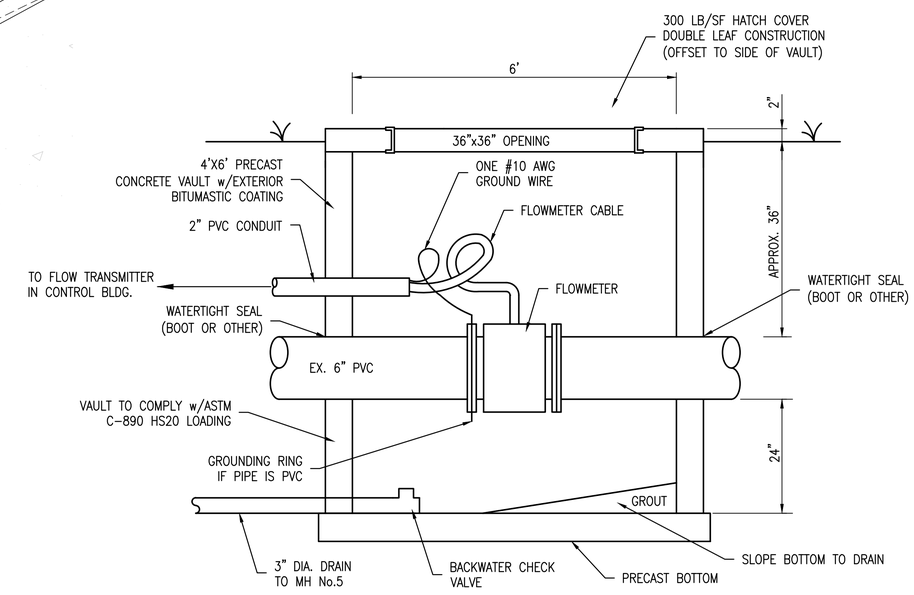

WASTE SLUDGE FLOWMETER DETAIL

NOT TO SCALE

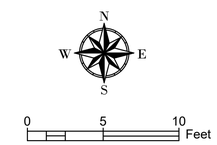

ALABAMA LICENSED PROFESSIONAL ENGINEER NO. 15562 MAX A. MOBLEY 7-16-25

Revision	Description	Date

DESIGNED BY: MAM
DRAWN BY: JDP
DATE: MAY 2025

ENG / ARCH / SURVEYOR OF RECORD	REGISTRATION No.
Cert. of Auth. No.	FL GA AA-C001053 001116
ARCHITECT	CA-3480 CA-1818 001118
ENGINEER	CA-7842

These drawings are copyrighted and the property of Poly-Inc. Any use, partial or full reproduction is prohibited except by written Agreement with Poly-Inc.

POLY, INC.
1935 Headland Avenue
Dothan, AL 36303
334-793-4700
102 Sunset Lane
Shalimar, FL 32579
850-609-1100
117 Gemini Cir., Ste. 416
Birmingham, AL 35209
205-913-0330
WWW.POLY-INC.COM

ARPA 2022 SEWER INFRASTRUCTURE IMPROVEMENTS CONTRACT 1
TREATMENT AND COLLECTION SYSTEM IMPROVEMENTS
CWSRF PROJECT No. CS010864-02
FOR THE
CITY OF BRUNDIDGE, ALABAMA

PIPING MODIFICATIONS

SHEET No.
C-06

PROJECT No.
14-203

Poly, Inc. - G:\CLEANSTUFF-10-14\14203 ARPA Water and Sewer Improvements\WIP\03-CIV\LIWWTP\CONT 1 SYSTEM IMPROVEMENTS\14203_02_C-06_PIPING MODIFICATIONS.dwg [C-06] Last Printed: July 16, 2025 - 11:09am By: JPeaden

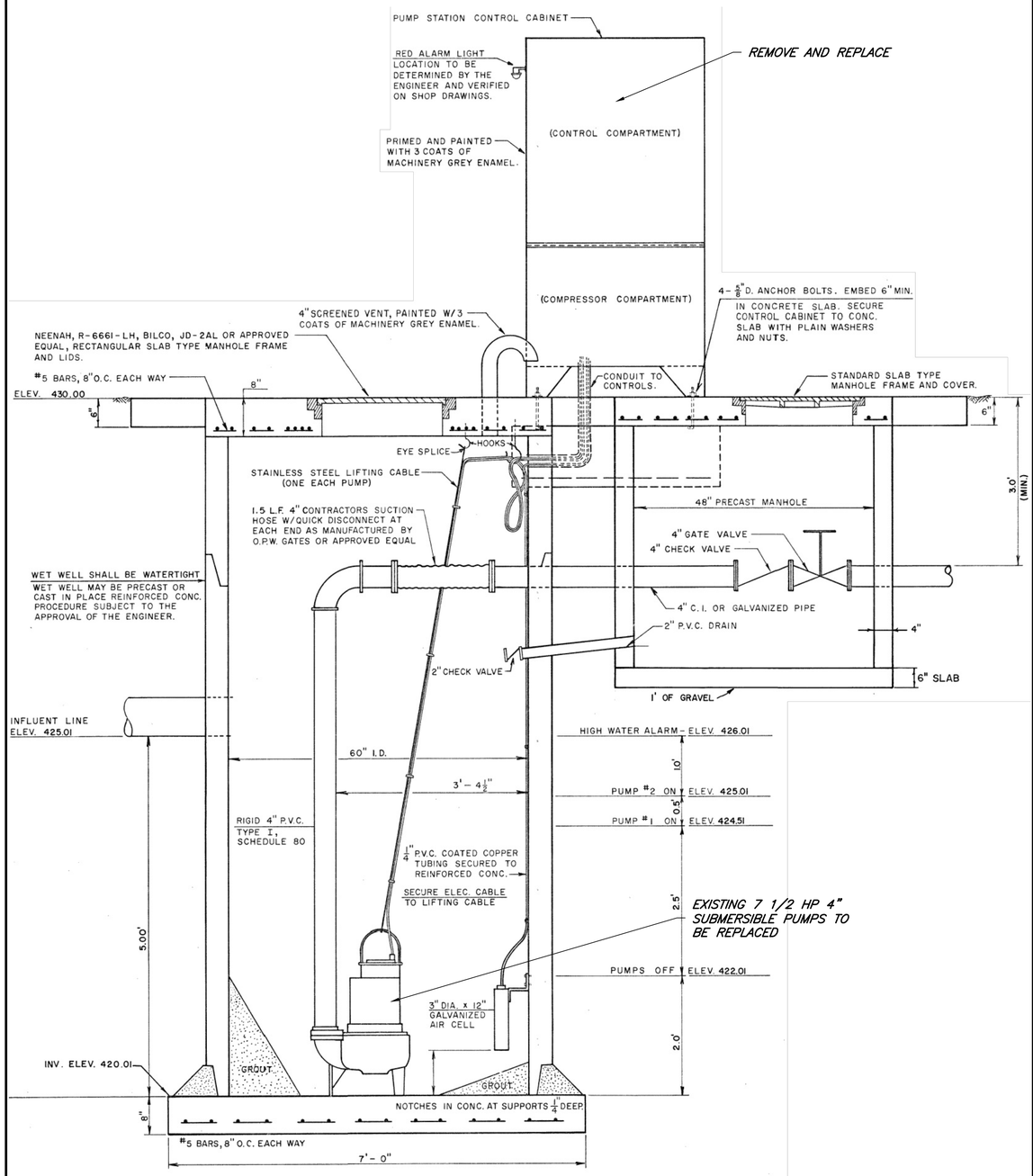

ELEVATION

EXISTING

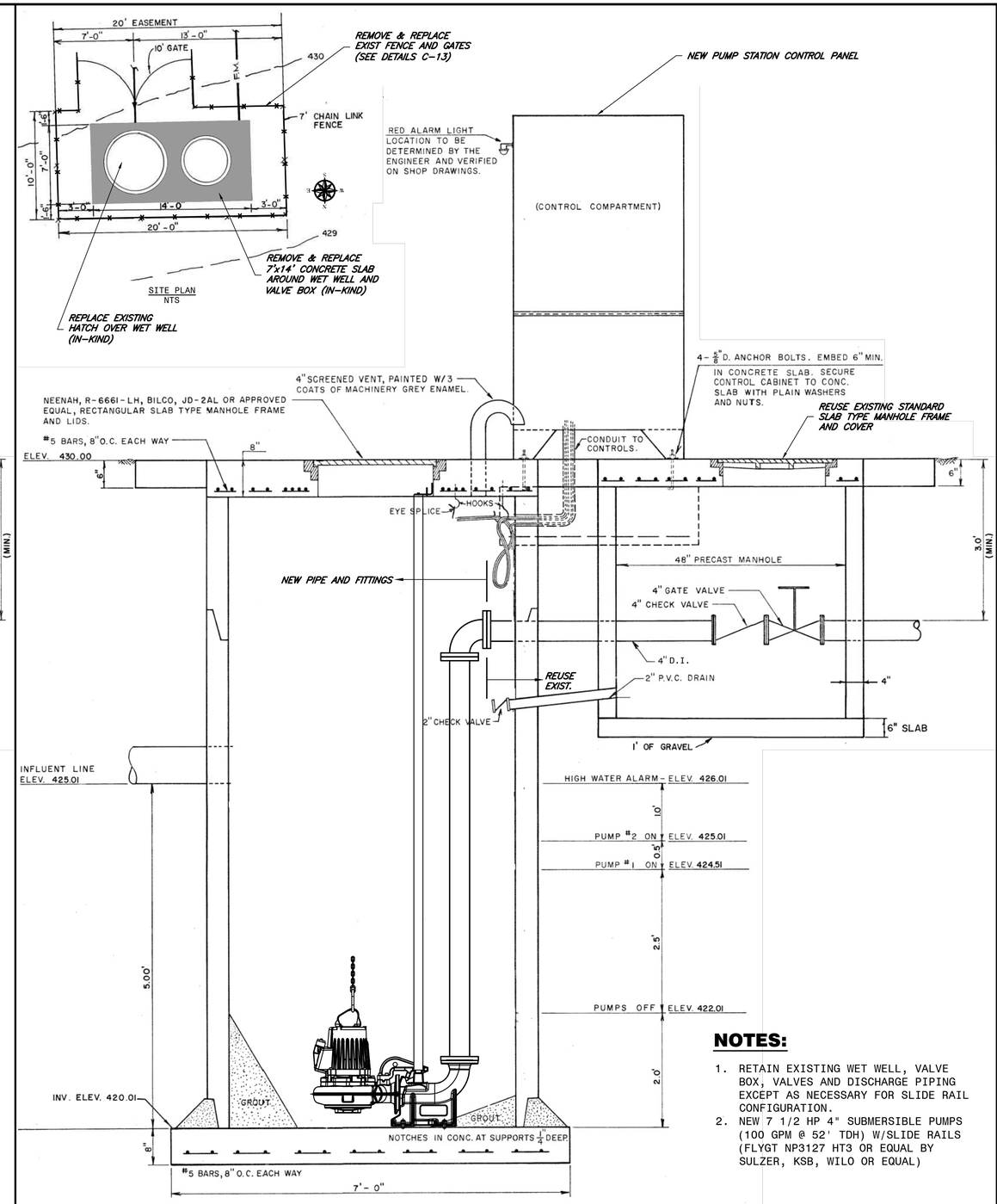

ELEVATION

PROPOSED

NOTES:

1. RETAIN EXISTING WET WELL, VALVE BOX, VALVES AND DISCHARGE PIPING EXCEPT AS NECESSARY FOR SLIDE RAIL CONFIGURATION.
2. NEW 7 1/2 HP 4" SUBMERSIBLE PUMPS (100 GPM @ 52' TDH) W/SLIDE RAILS (FLYGT NP3127 HT3 OR EQUAL BY SULZER, KSB, WILO OR EQUAL)

ALABAMA LICENSED NO. 19562 PROFESSIONAL 7-16-25 MAX A. MOBLEY

POLY

Revision	Description	Date

DESIGNED BY: MAM | DRAWN BY: JDP | DATE: MAY 2025

ENG / ARCH / SURVEYOR OF RECORD | Cert. of Auth. No. | REGISTRATION No.
ARCHITECT CA-0480 | AA-C001053 | 001118 | AL
ENGINEER CA-7842 | CA-1818 | 001118 | GA

These drawings are copyrighted and the property of Poly-Inc. Any use, partial or full reproduction is prohibited except by written Agreement with Poly-Inc.

POLY, INC.
1935 Headland Avenue
Dothan, AL 36303
334-793-4700
102 Sunset Lane 117 Gemini Cir., Ste. 416
Shalimar, FL 32579 Birmingham, AL 35209
850-609-1100 205-913-0330
WWW.POLY-INC.COM

ARPA 2022 SEWER INFRASTRUCTURE IMPROVEMENTS CONTRACT 1
TREATMENT AND COLLECTION SYSTEM IMPROVEMENTS
OWSRF PROJECT No. C301064-02
FOR THE
CITY OF BRUNDIDGE, ALABAMA

ALLEN ROAD
PUMP STATION

SHEET No.
C-07

PROJECT No.
14-203

Poly, Inc. - G:\CLEANSTUFF-10-14\14203 ARPA Water and Sewer Improvements\WIP\03-CIVIL\WWTP\CONT 1 SYSTEM IMPROVEMENTS\14203_02_C-07_ALLEN RD PS.dwg [ALLEN RD PS MODIFICATIONS] Last Printed: July 16, 2025 - 11:22am By: JPeaden

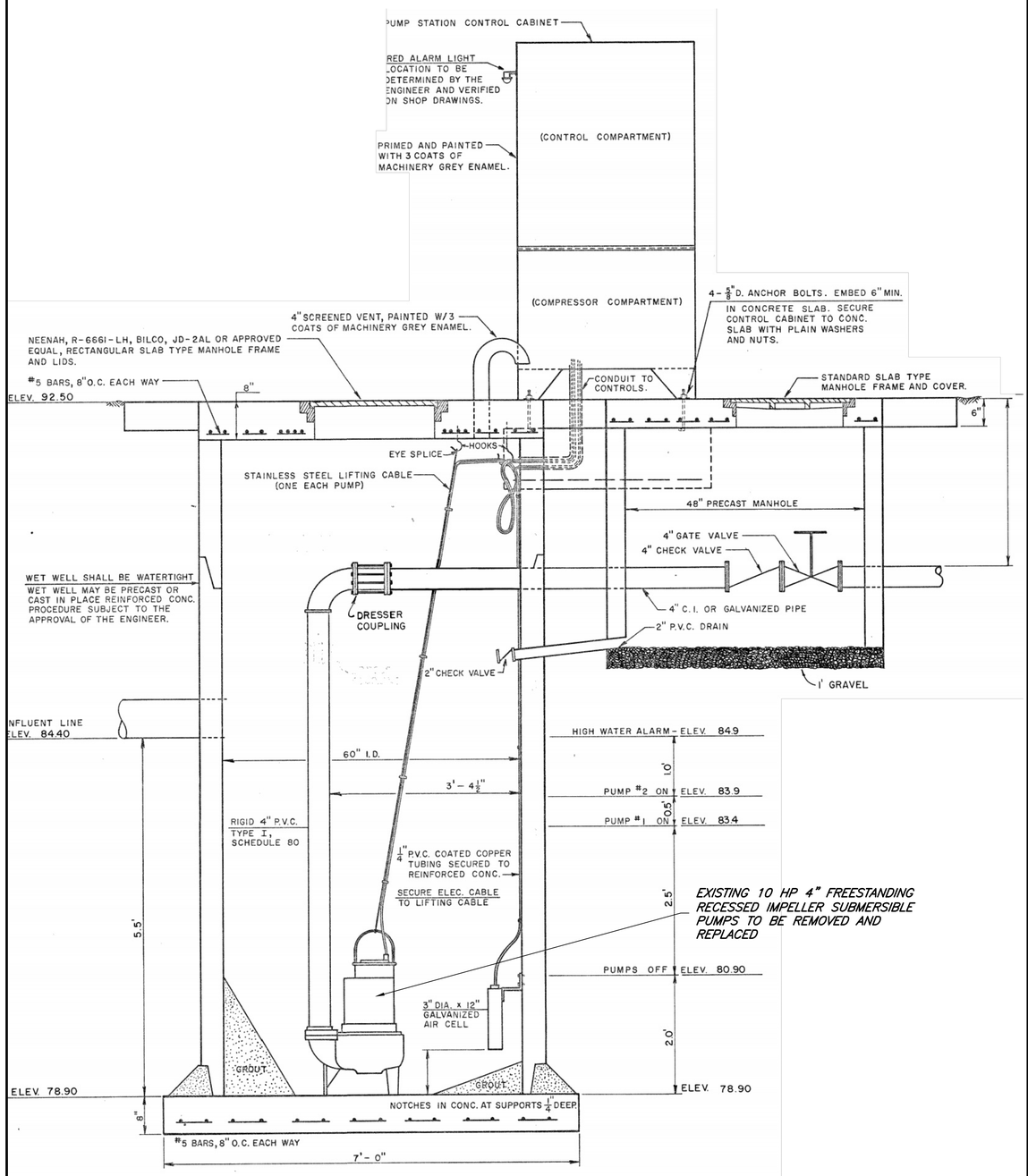

ELEVATION
EXISTING

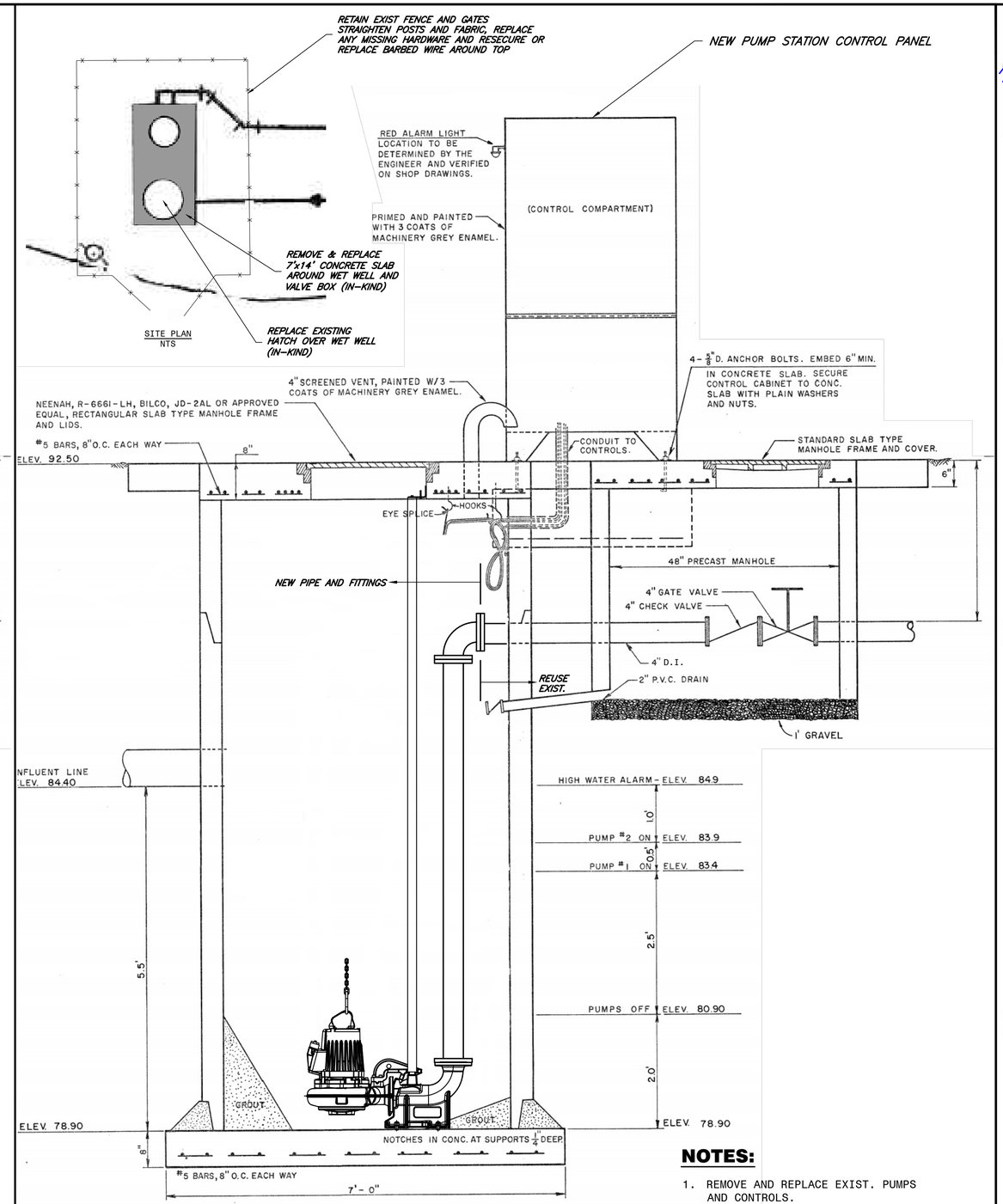

ELEVATION
PROPOSED

NOTES:

1. REMOVE AND REPLACE EXIST. PUMPS AND CONTROLS.
2. REMOVE AND REPLACE EXIST. SLAB
3. RETAIN WET WELL, VALVE PIT, ALL HATCHES, VALVES AND DISCHARGE PIPING EXCEPT AS NECESSARY FOR SLIDE RAIL CONFIGURATION.
4. NEW 10 HP 4" SUBMERSIBLE PUMPS (100 GPM @ 67' TDH) W/SLIDE RAILS (FLYGT NP3127 HT3 OR EQUAL BY SULZER, KSB, WILO OR EQUAL)

ALABAMA REGISTERED PROFESSIONAL ENGINEER MAX A. MOBLEY NO. 31562
7-16-25

POLY

Revision	Description	Date

DATE: MAY 2025

DESIGNED BY: MAM	DRAWN BY: JDP	REGISTRATION No.
ENG / ARCH / SURVEYOR OF RECORD		
Cert. of Auth. No.	FL	GA
ARCHITECT GA-0490	AA-C001551	001118
ENGINEER GA-7845	GA-1818	001118

These drawings are copyrighted and the property of Poly-Inc. Any use, partial or full reproduction is prohibited without written Agreement with Poly-Inc.

POLY, INC.
1935 Headland Avenue
Dothan, AL 36303
334-793-4700
102 Sunset Lane
Shalimar, FL 32579
850-609-1100
117 Gemini Cir., Ste. 416
Birmingham, AL 35209
205-913-0330
WWW.POLY-INC.COM

ARPA 2022 SEWER INFRASTRUCTURE IMPROVEMENTS
CONTRACT I
TREATMENT AND COLLECTION SYSTEM IMPROVEMENTS
OWNER PROJECT No. C0501084-02
FOR THE
CITY OF BRUNDIDGE, ALABAMA

ARMORY
PUMP STATION

SHEET No.
C-08
PROJECT No.
14-203

Poly, Inc. - G:\CLEANSTUFF-10-14\14203 ARPA Water and Sewer Improvements\WIP\03-CIVIL\WWTP\CONT 1 SYSTEM IMPROVEMENTS\14203_02_C-08_ARMORY PS.dwg [ARMORY PS MODIFICATIONS] Last Printed: July 16, 2025 - 11:28am By: JPeaden

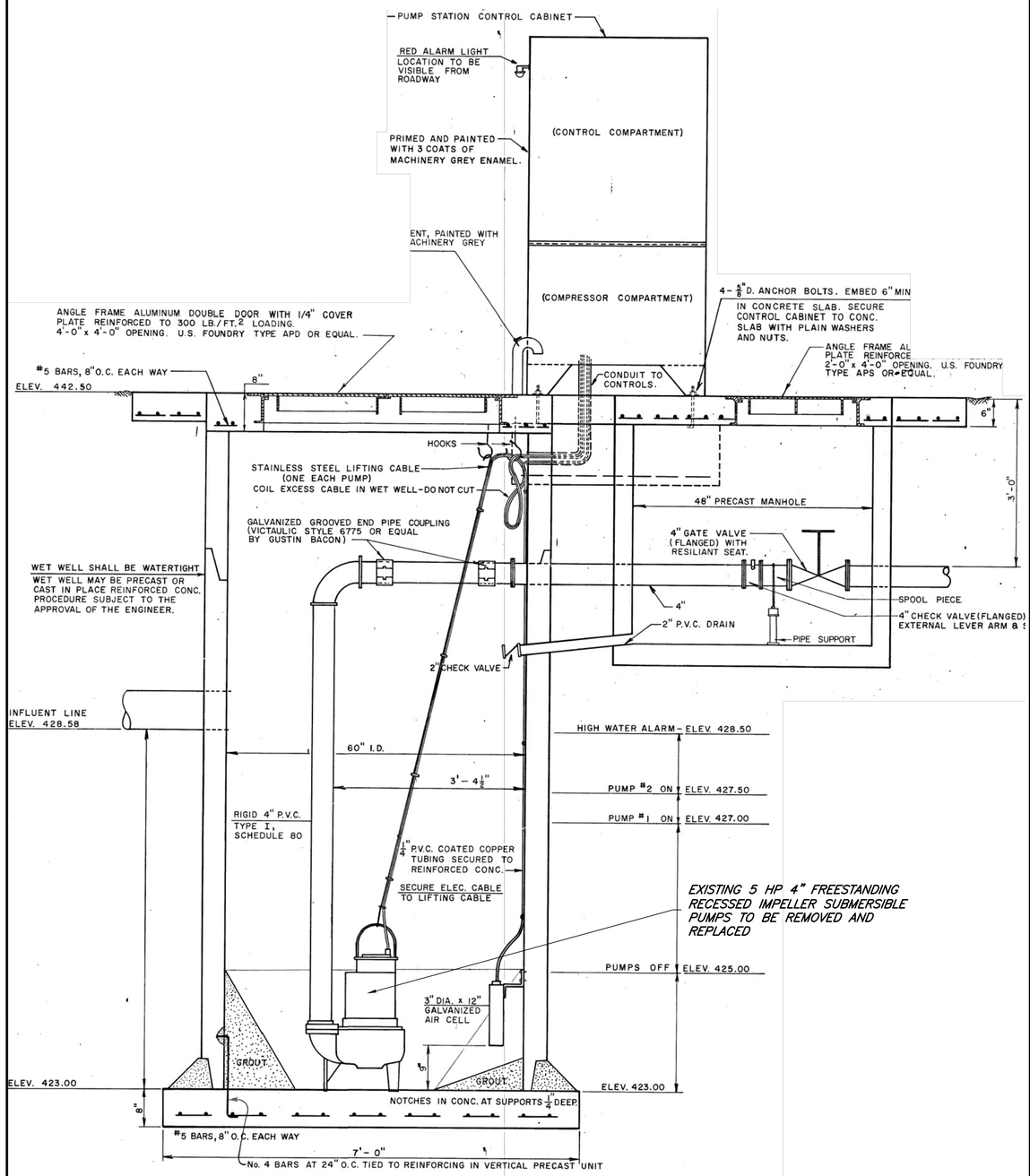

ELEVATION

EXISTING

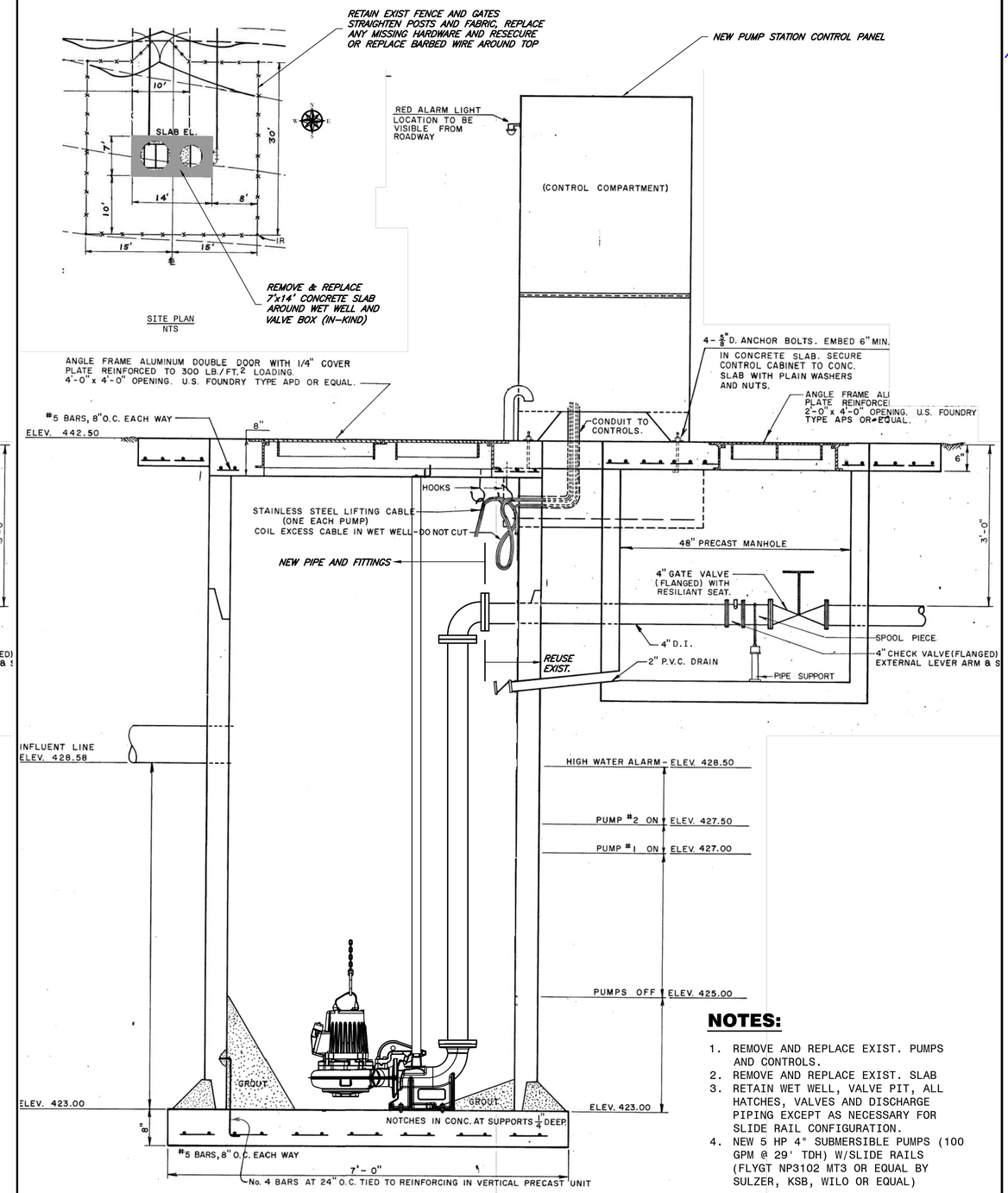

ELEVATION

PROPOSED

NOTES:

1. REMOVE AND REPLACE EXIST. PUMPS AND CONTROLS.
2. REMOVE AND REPLACE EXIST. SLAB
3. RETAIN WET WELL, VALVE PIT, ALL HATCHES, VALVES AND DISCHARGE PIPING EXCEPT AS NECESSARY FOR SLIDE RAIL CONFIGURATION.
4. NEW 5 HP 4" SUBMERSIBLE PUMPS (100 GPM @ 29' TDH) W/SLIDE RAILS (FLYGT NP3102 MT3 OR EQUAL BY SULZER, KSB, WILO OR EQUAL)

ALABAMA LICENSED NO. 21562 PROFESSIONAL 7-16-25 MAX A. MOBLEY

Revision	Description	Date

DATE: MAY 2025

DRAWN BY: JDP

DESIGNED BY: MAM

ENG / ARCH / SURVEYOR OF RECORD:	REGISTRATION No.
Cert. of Auth. No.	
ARCHITECT CA-0480 AL	AA-C001051 10/01/18
ENGINEER CA-78-E CA	CA-1818 10/01/18

These drawings are copyrighted and the property of Poly-Inc. Any use, partial or full reproduction is prohibited without written Agreement with Poly-Inc.

POLY, INC.
1935 Headland Avenue
Dothan, AL 36303
334-793-4700
102 Sunset Lane 117 Gemini Cir., Ste. 416
Shalimar, FL 32579 Birmingham, AL 35209
850-609-1100 205-913-0330
WWW.POLY-INC.COM

ARPA 2022 SEWER INFRASTRUCTURE IMPROVEMENTS CONTRACT 1 TREATMENT AND COLLECTION SYSTEM IMPROVEMENTS CWSRF PROJECT No. C5017084-02 FOR THE CITY OF BRUNDIDGE, ALABAMA

TENNILLE RD. PUMP STATION

SHEET No. C-09

PROJECT No. 14-203

Poly, Inc. - G:\CLEANSTUFF-10-14\14203 ARPA Water and Sewer Improvements\WIP\03-CIVIL\WWTP\CONT 1 SYSTEM IMPROVEMENTS\14203_02_C-09_TENNILLE RD PS.dwg [TENNILLE RD PS MODIFICATIONS] Last Printed: July 16, 2025 - 11:38am By: JPeaden

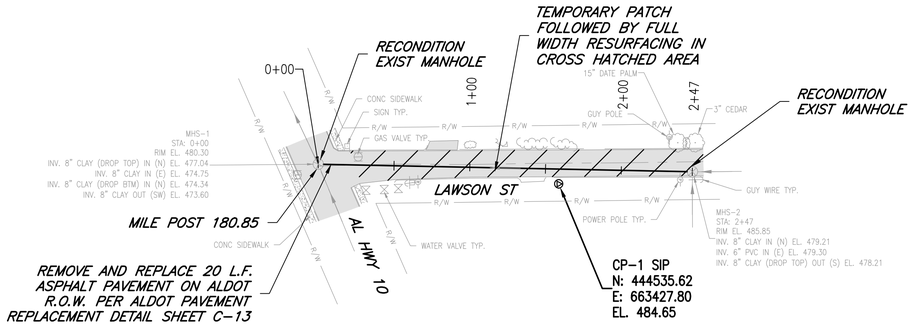

NOTES

1. SEE TRAFFIC CONTROL PLAN FOR HIGHWAY 10 SHEET C-16
2. BYPASS PUMP AROUND CONSTRUCTION AREA BELOW MH-2 ON LAWSON STREET

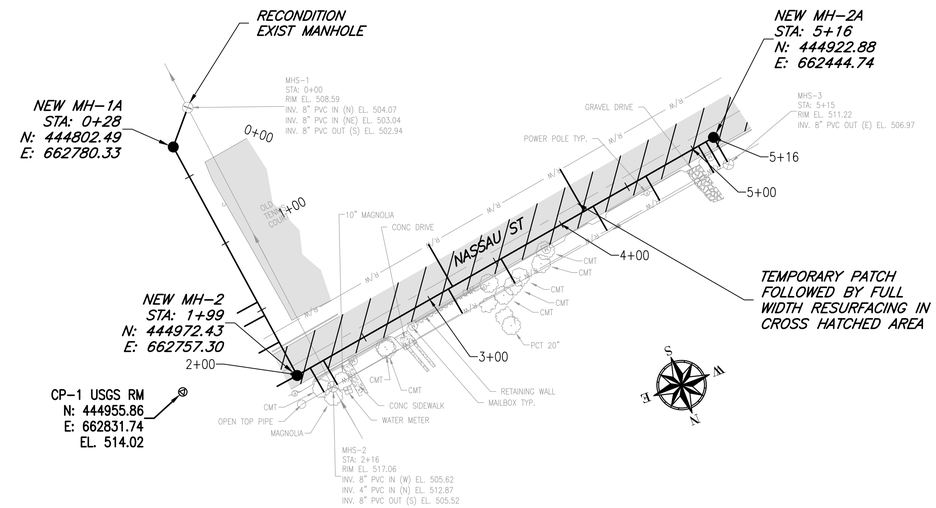

NOTES

1. PARTIALLY DEMOLISH EXIST. MANHOLES MHS-2 AND MHS-3 DELIVER FRAMES & COVERS TO CITY SHOP.
2. TRANSFER ANY SERVICES ENTERING MHS-2 OR MHS-3 TO NEW MANHOLE.
3. SERVICE LOCATIONS SHOWN ARE FROM TAP LOCATIONS IN THE EXISTING SEWER FROM TV INSPECTION. CITY MAY ELECT NOT TO INSTALL WYES AT SOME LOCATIONS.
4. FOLLOWING TRANSFER OF ALL SERVICES TO NEW LINE REMOVE TOP 4' OF MANHOLES TO BE ABANDONED AND FILL WITH DIRT.

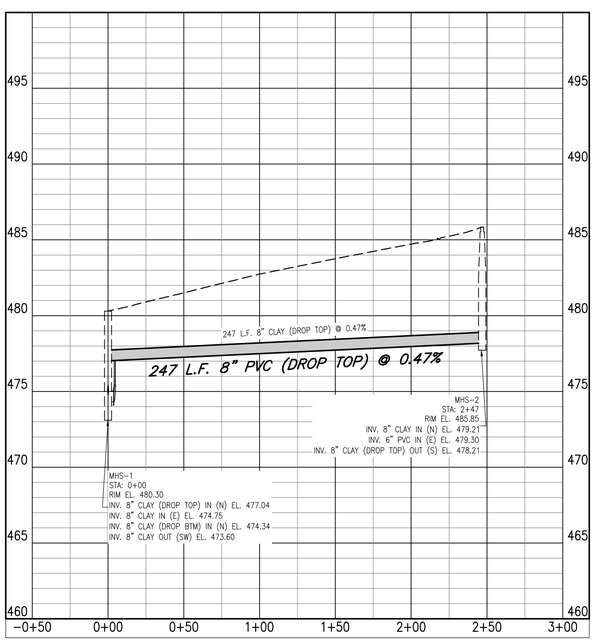

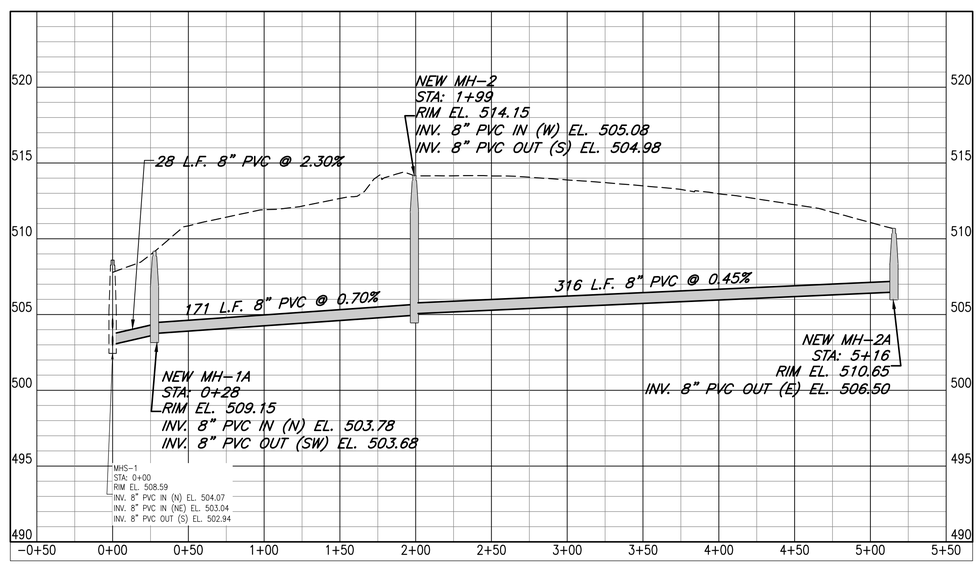

0 50 100 Feet

ALABAMA LICENSED NO. 31562 PROFESSIONAL 7-16-25 MAX A. MOBLEY

POLY

Revision	Description	Date

DESIGNED BY: MAM
DRAWN BY: JDP
DATE: MAY 2025
ENG / ARCH / SURVEYOR OF RECORD
REGISTRATION No.
Cert of Auth. No. FL CA
ARCHITECT CA-0483 AA-C000153 001118
ENGINEER CA-1818 CA-1818 001118

These drawings are copyrighted by the property of Poly-Inc. Any use, partial or full reproduction is prohibited without written agreement with Poly-Inc.

POLY, INC.
1935 Headland Avenue
Dothan, AL 36303
334-793-4700
102 Sunset Lane Shalimar, FL 32579 850-609-1100
117 Gemini Cir., Ste. 416 Birmingham, AL 35209 205-913-0330
WWW.POLY-INC.COM

ARPA 2022 SEWER INFRASTRUCTURE IMPROVEMENTS
CONTRACT 1
TREATMENT AND COLLECTION SYSTEM IMPROVEMENTS
CWSRF PROJECT No. C501084-02
FOR THE
CITY OF BRUNDIDGE, ALABAMA

LAWSON ST & NASSAU ST.
SEWER
PLAN & PROFILE

SHEET No.
C-10
PROJECT No.
14-203

Poly, Inc. - G:\CLEANSTUFF-10-14\14203 ARPA Water and Sewer Improvements\WIP\02-SURVEY\WWTP\CONT 1 SYSTEM IMPROV\14203_CONT_1_LAWSON AND NASSAU.dwg [LAWSON SEWER] Last Printed: July 16, 2025 - 11:42am By: JPeaden

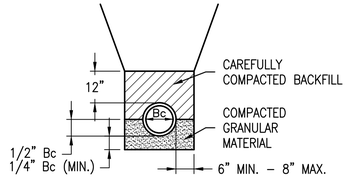

STANDARD SEWER PIPE BEDDING

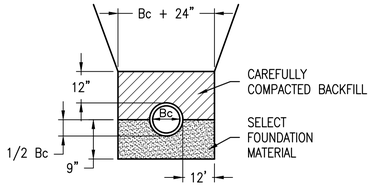

SPECIAL SEWER PIPE BEDDING

(USE WHERE DIRECTED BY THE OWNER'S REPRESENTATIVE)

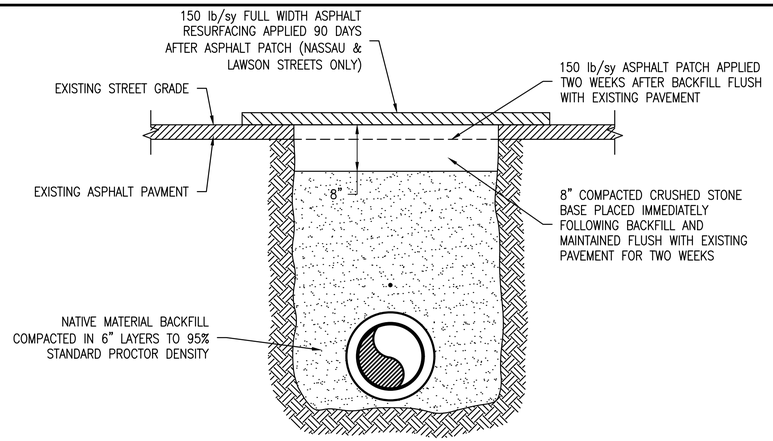

CITY STREET (NON-ALDOT) ASPHALT REPAIR DETAIL

N.T.S.

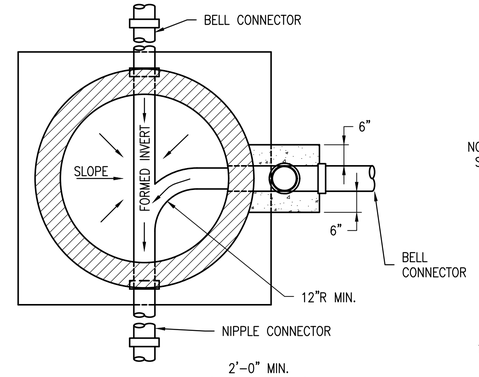

PLAN

NOTES:

1. BEARING SURFACES TO BE MACHINED.
2. DIMENSIONS ARE NOMINAL.

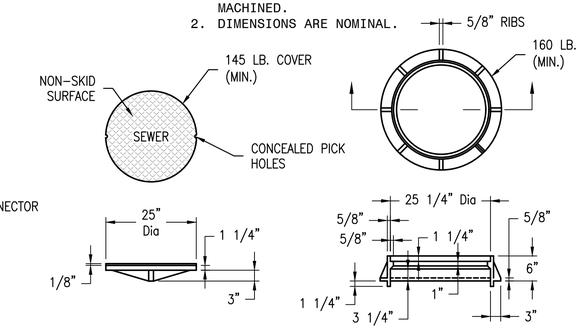

MANHOLE FRAME AND COVER

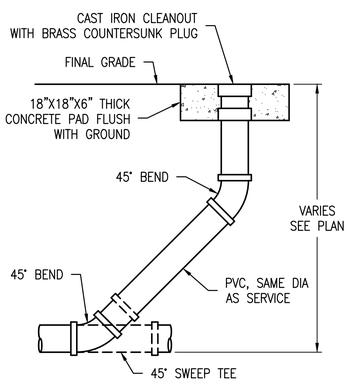

CLEANOUT

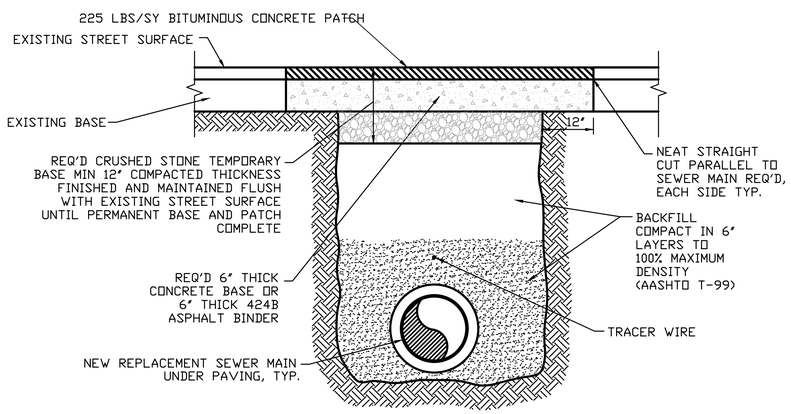

ALDOT R&R ASPHALT DETAIL

N.T.S.

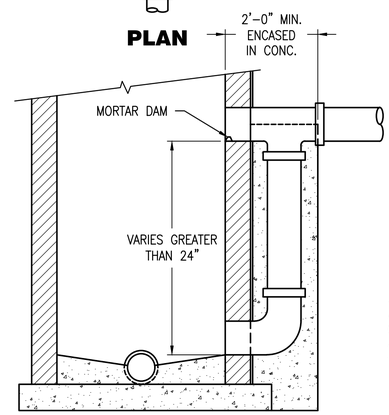

ELEVATION

TYPICAL DROP CONNECTION

NOTE:

ALL PRECAST MANHOLES SHALL COMPLY WITH ASTM SPEC. C 476-617, C 478-70 AND C 139-65 AS APPLICABLE

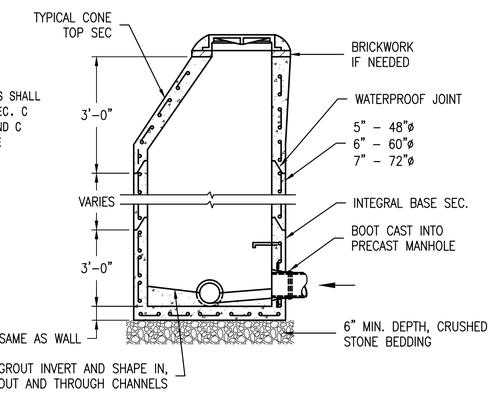

TYPICAL PRECAST MANHOLE AND SEPARATE BASE SECTION BELOW

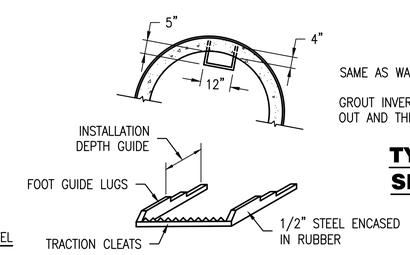

MANHOLE STEPS

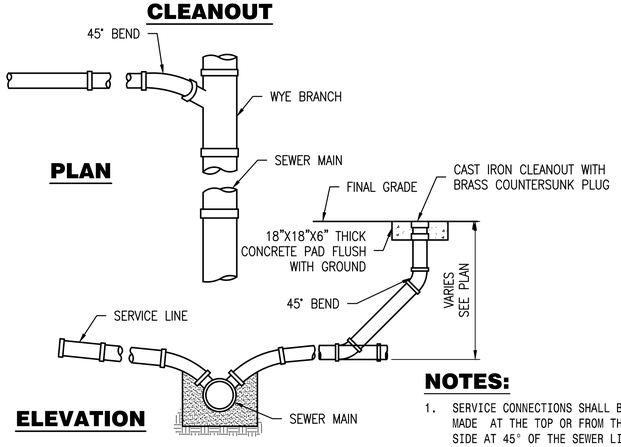

NOTES:

1. SERVICE CONNECTIONS SHALL BE MADE AT THE TOP OR FROM THE SIDE AT 45° OF THE SEWER LINE.
2. SERVICE PIPE SHALL BE OF THE SAME MATERIAL AND QUALITY AS THE MAIN SEWER LINE.

SEWER SERVICE CONNECTION

MANHOLE SHALL BE LINED WITH ONE COAT OF COAL–TAR EPOXY WITH MIN. DRY FILM THICKNESS OF 14 MILS. COATING SHALL BE APPLIED IN ACCORDANCE WITH MANUFACTURER'S RECOMMENDATIONS. COAL–TAR EPOXY SHALL BE TNEMEC–TAR 46H–413 OR APPROVED EQUAL.

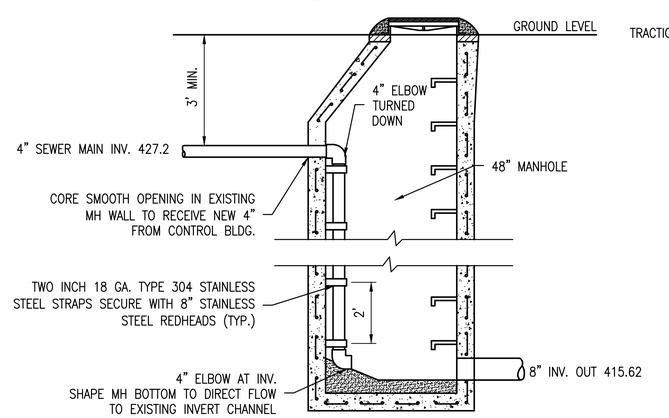

DISCHARGE DETAIL

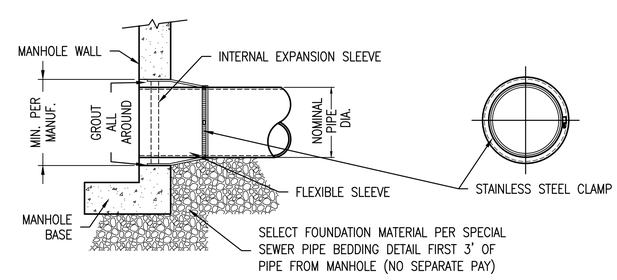

TYPICAL PIPE INSTALLATION AT MANHOLES

ALABAMA
NO. 15562
PROFESSIONAL
7-16-25
MAX A. MOBLEY

Revision	Description	Date

DESIGNED BY: MAM
DRAWN BY: JDP
DATE: MAY 2025
ENG / ARCH / SURVEYOR OF RECORD — REGISTRATION No.
Cert. of Auth. No. — AL — FL — GA.
ARCHITECT — CA-0480 — AA-C000503 — 001118 — 001118
ENGINEER — CA-7842 — CA-1818 — 001118

These drawings are copyrighted and the property of Poly-Inc. Any use, partial or full reproduction is prohibited without written Agreement with Poly-Inc.

POLY, INC.
1935 Headland Avenue
Dothan, AL 36303
334-793-4700
102 Sunset Lane — 117 Gemini Cir., Ste. 416
Shalimar, FL 32579 — Birmingham, AL 35209
850-609-1100 — 205-913-0330
WWW.POLY-INC.COM

ARPA 2022 SEWER INFRASTRUCTURE IMPROVEMENTS
CONTRACT 1
TREATMENT AND COLLECTION SYSTEM IMPROVEMENTS
OWSRF-PROJECT No. CS01980442-02
FOR THE
CITY OF BRUNDIDGE, ALABAMA

SEWER DETAILS

SHEET No.
C-11
PROJECT No.
14-203

Poly, Inc. - G:\CLEANSTUFF-10-14\14203 ARPA Water and Sewer Improvements\WIP\03-CIV\LIWWTP\CONT 1 SYSTEM IMPROVEMENTS\14203_02_C-11_SEWER DETAILS.dwg [Layout1] Last Printed: July 16, 2025 - 11:39am By: JPeaden

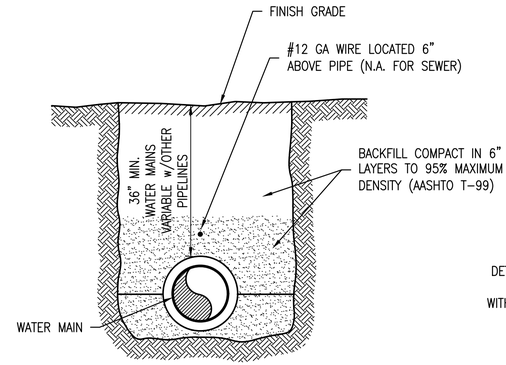

UNPAVED AREAS
PIPELINE INSTALLATION
NO SCALE

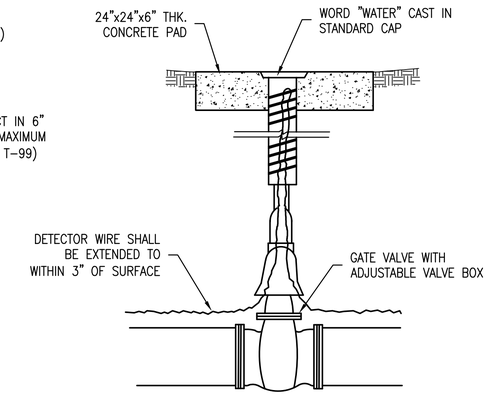

GATE VALVE & BOX
NO SCALE

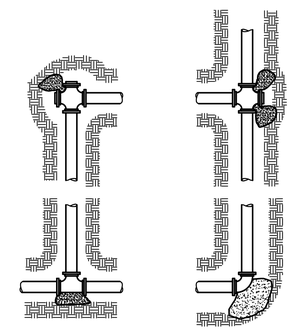

PIPE DIAMETER	MINIMUM THRUST BLOCK BEARING AREA
3"	2 SQ.FT.
6"	4.5 SQ.FT.
8"	6.25 SQ. FT.
10"	11 SQ. FT.
12"	22 SQ. FT.

NOTE:
EACH THRUST BLOCK SHALL BE SIZED IN ACCORDANCE WITH PIPE SIZE, SOIL CONDITION AND TEST PRESSURE.

THRUST BLOCK DETAIL
NO SCALE

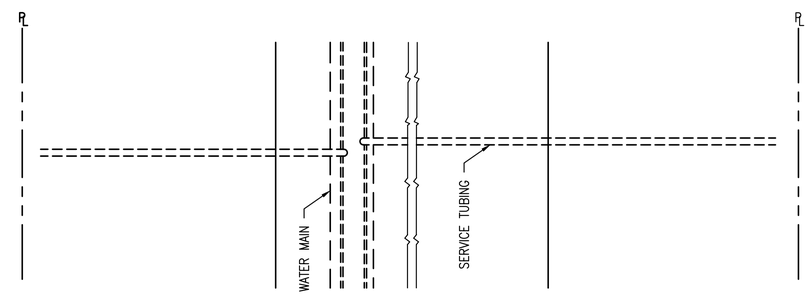

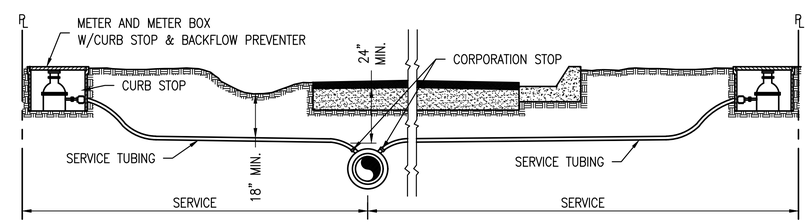

ELEVATION

TYPICAL SERVICE CONNECTION
NO SCALE

ALABAMA LICENSED PROFESSIONAL ENGINEER
NO. 11562
MAX A. MOBLEY
7-16-25

POLY

Revision	Description	Date

DATE: MAY 2025
DRAWN BY: JDP
DESIGNED BY: MAM
ENG / ARCH / SURVEYOR OF RECORD: REGISTRATION No.
Cert. of Auth. No. AL FL GA
ARCHITECT GA-0490 AA-C001051 001118 001118
ENGINEER GA-78-E GA-1818 001118

These drawings are copyrighted and the property of Poly-Inc. Any use, partial or full reproduction is prohibited without written Agreement with Poly-Inc.

POLY, INC.
1935 Headland Avenue
Dothan, AL 36303
334-793-4700
102 Sunset Lane
Shalimar, FL 32579
850-609-1100
117 Gemini Cir., Ste. 418
Birmingham, AL 35209
205-913-0330
WWW.POLY-INC.COM

ARPA 2022 SEWER INFRASTRUCTURE IMPROVEMENTS
CONTRACT 1
TREATMENT AND COLLECTION SYSTEM IMPROVEMENTS
CWSRF PROJECT No. CS0010884-02
FOR THE
CITY OF BRUNDIDGE, ALABAMA

WATER DETAILS

SHEET No.
C-12
PROJECT No.
14-203

Poly, Inc. - G:\CLEANSTUFF-10-14\14203 ARPA Water and Sewer Improvements\WIP\03-CIVIL\WWTP\CONT 1 SYSTEM IMPROVEMENTS\14203_02_C-12_WATER DETAILS.dwg [Layout1] Last Printed: July 16, 2025 - 11:40am By: JPeaden

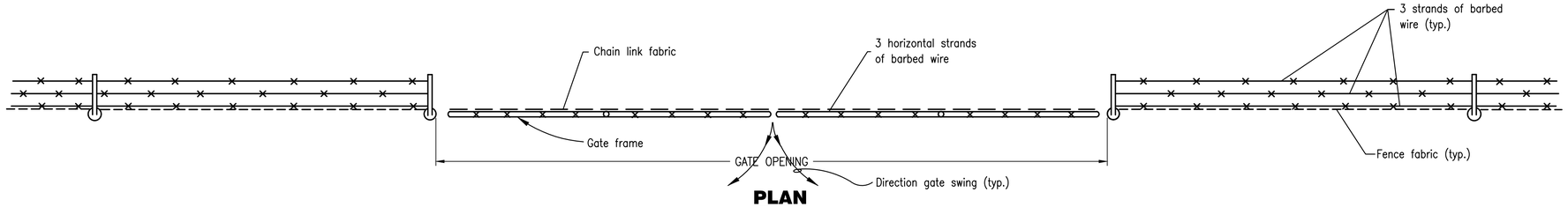

PLAN

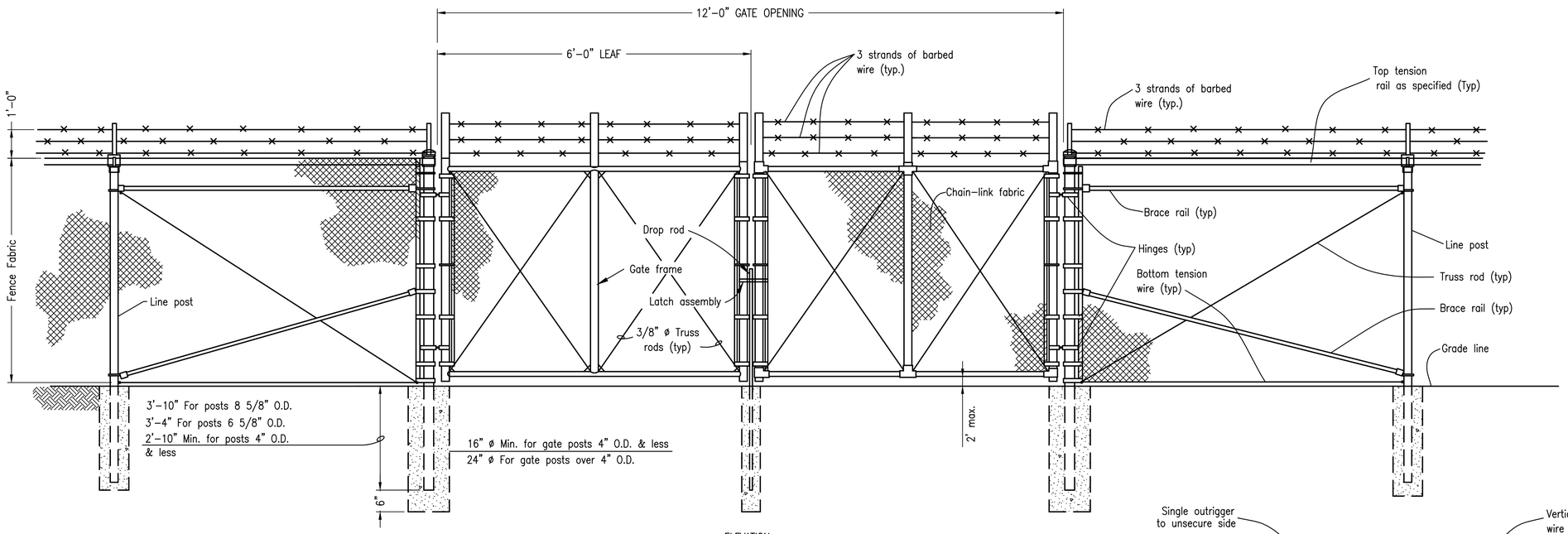

ELEVATION

DOUBLE SWING GATE (TYPE FE6 FENCE)

NO SCALE

GATE POST SCHEDULE	
GATE LEAF WIDTH (NOMINAL)	OUTSIDE DIMENSION (NOMINAL)
6' or less	2.875" OD 2.5" SQ
More than 6' to 13'	4.0" OD
More than 13' to 18'	6.625" OD
More than 18'	8.625" OD

NOTES:

1. Details shown are to clarify requirements and are not intended to limit other type of fence sections and methods of installation.
2. Swing Gates shall be constructed with drop rods, padlocks, latch assembly and gate keepers except as noted.
3. All gate frames shall be a minimum 1.90" nominal (round) or 2.00" nominal (square). Gate frames shall be of welded construction or shall be assembled using heavy fittings. At Contractor's option a welded horizontal brace may be used in lieu of truss rods to brace all welded gate frames. The Contractor shall be responsible for the proper rigid construction of all gates supplied.
4. Gates shall be designated as follows:

Fence Type	-	FE5, FE6, etc.
Fence Height	-	Inches
Type Opening	-	SO (single)
	-	DO (double)
Hinge	-	RA (standard)
	-	HO (offset)
Opening	-	Feet (clear opening between gate posts)

EXAMPLES: FE6-84-DO-RA-24
FE5-48-SO-HO-6

DOUBLE SWING GATE SHALL BE
FE6-72-DO-RA-12

PERSONNEL GATE SHALL BE
FE6-72-SO-RA-4

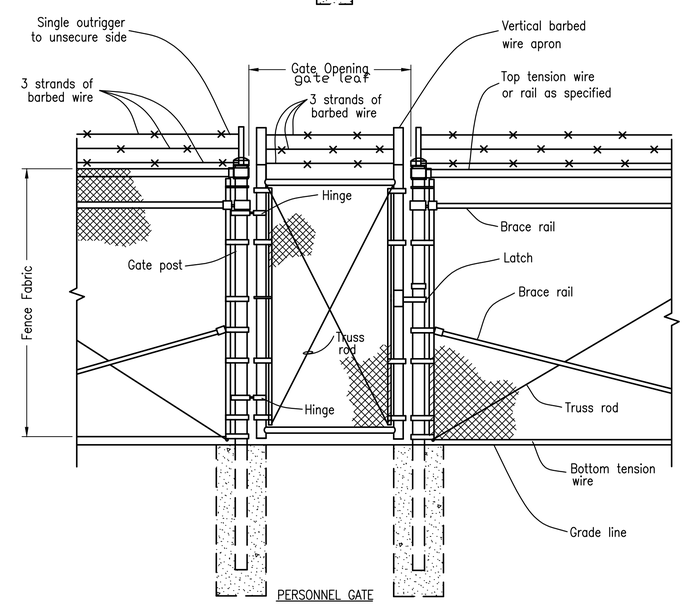

PERSONNEL GATE

TYPE FE6 FENCE

NO SCALE

ALABAMA LICENSED PROFESSIONAL ENGINEER MAX A. MOBLEY NO. 31562 7-16-25

POLY

Revision	Description	Date

DATE: MAY 2025

DRAWN BY: JDP

DESIGNED BY: MAM

ENG / ARCH / SURVEYOR OF RECORD:	Cert. of Auth. No.	REGISTRATION No.
ARCHITECT	CA-0480	AA-C001050
ENGINEER	CA-784-E	CA-1818

Al.	FL	GA.
AA-C001050	00011 8	00011 8
CA-1818	00011 8	00011 8

These drawings are copyrighted and the property of Poly-Inc. Any use, partial or full reproduction is prohibited without the written Agreement with Poly-Inc.

POLY, INC.
1935 Headland Avenue
Dothan, AL 36303
334-793-4700
102 Sunset Lane
Shalimar, FL 32579
850-609-1100
117 Gemini Cir., Ste. 416
Birmingham, AL 35209
205-913-0330
WWW.POLY-INC.COM

ARPA 2022 SEWER INFRASTRUCTURE IMPROVEMENTS
CONTRACT 1
TREATMENT AND COLLECTION SYSTEM IMPROVEMENTS
CWSRF PROJECT No. C501804-02
FOR THE
CITY OF BRUNDIDGE, ALABAMA

FENCE DETAILS

SHEET No.
C-13

PROJECT No.
14-203

Poly, Inc. - G:\CLEANSTUFF-10-14\14203 ARPA Water and Sewer Improvements\WIP\03-CIVIL\WWTP\CONT 1 SYSTEM IMPROVEMENTS\14203_02_C-13_FENCE DETAILS.dwg [Layout1] Last Printed: July 16, 2025 - 11:40am By: JPeaden

Figure 6P-10. Lane Closure on a Two-Lane Road Using Flaggers (TA-10)

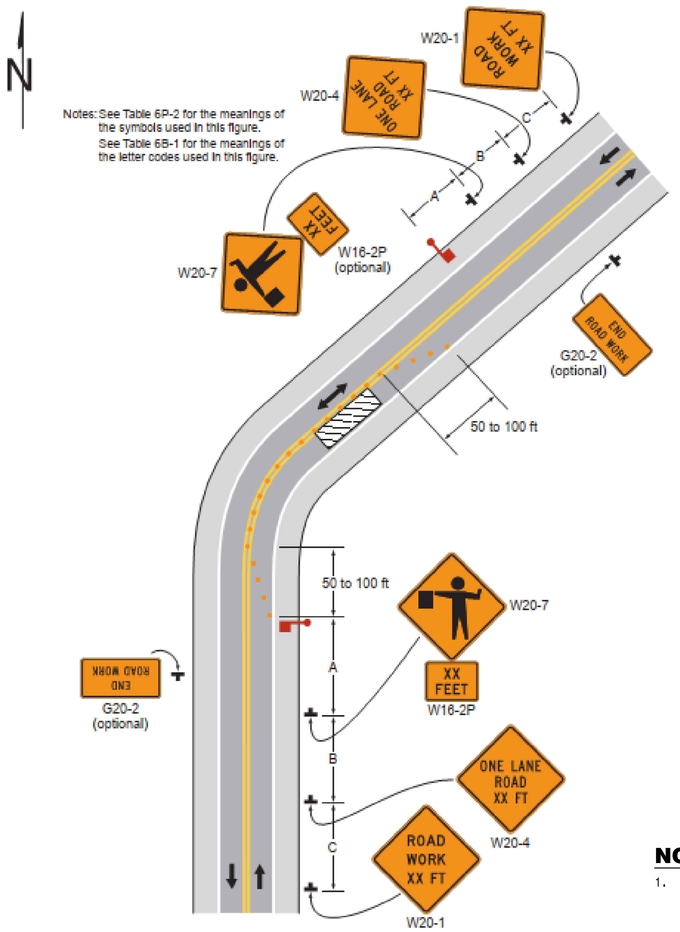

Typical Application 10

LANE CLOSURE ON TWO LANE ROAD USING FLAGGERS

GENERAL NOTES FOR CONSTRUCTION ON ALDOT RIGHT-OF-WAY

1. ALDOT PAVEMENT REPLACEMENT SHOWN ON PLANS SHALL BE INSTALLED PER DETAIL SHOWN ON SHEET C-2 OF PERMIT PLANS.
2. TRAFFIC CONTROL SHALL BE INSTALLED PER DETAIL 6H-11, SHOWN BELOW.
3. THE POSTED SPEED LIMIT THRU THE WORK ZONE IS 35 M.P.H.
4. ALL CONTACT PERSONS APPLICABLE TO THIS JOB ARE SHOWN ON SHEET G-1
5. ONE LANE OF ALABAMA HWY. 10 SHALL REMAIN OPEN FOR THRU TRAVEL AT ALL TIMES.
6. ALL TRAFFIC CONTROL SHALL BE INSTALLED IN ACCORDANCE WITH THE LATEST EDITION OF PART 6 OF MUTCD.
7. ANY DISTURBED AREAS SHALL BE RESODDED OR SEEDED IN ACCORDANCE WITH THE LATEST SPECIFICATION FOR GRASSING OR AS DIRECTED BY ALDOT.
8. AREA THAT IS OPEN CUT ON ALABAMA HWY 10 SHALL BE BACKFILLED FLUSH WITH EXISTING PAVEMENT BEFORE NIGHTFALL AND REFLECTORIZED DRUMS PLACED ON TOP UNTIL PAVEMENT IS COMPLETELY RESTORED PER ALDOT DETAIL SHOWN ON SHEET C-2 OF PERMIT PLANS.
9. ONE LANE OF ROADWAY TO REMAIN OPEN AT ALL TIMES.
10. BITUMINOUS ASPHALT TO BE PLACED NO LATER THAN THE FOLLOWING DAY AFTER BACKFILL HAS BEEN COMPLETED ALONG AL 10. PER ALDOT SPECIFICATIONS. ALDOT PAVEMENT DETAILS SHOWN ON SHEET C-2.

NOTES:

1. FLAGMEN TO BE USED AT ALL TIMES FOR ONE LANE OPERATIONS

Table 6H-2. Meaning of Symbols on Typical Application Diagrams

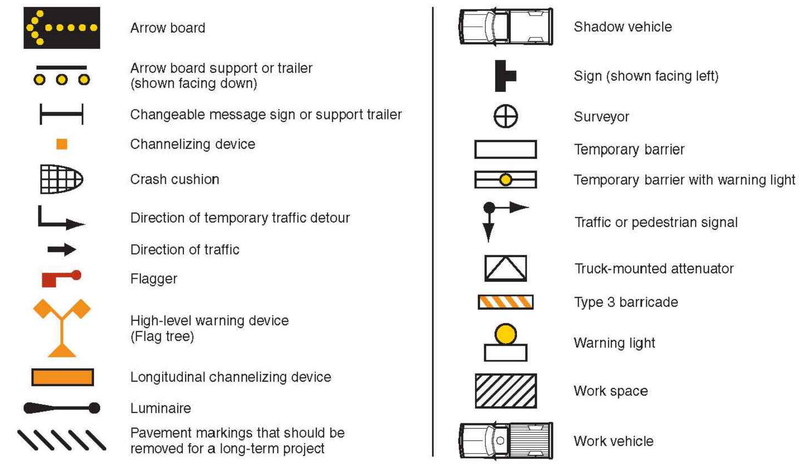

Table 6H-3. Meaning of Letter Codes on Typical Application Diagrams

Road Type	Distance Between Signs**		
	A	B	C
Urban (low speed)*	100 feet	100 feet	100 feet
Urban (high speed)*	350 feet	350 feet	350 feet
Rural	500 feet	500 feet	500 feet
Expressway / Freeway	1,000 feet	1,500 feet	2,640 feet

* Speed category to be determined by highway agency

** The column headings A, B, and C are the dimensions shown in Figures 6H-1 through 6H-46. The A dimension is the distance from the transition or point of restriction to the first sign. The B dimension is the distance between the first and second signs. The C dimension is the distance between the second and third signs. (The "first sign" is the sign in a three-sign series that is closest to the TTC zone. The "third sign" is the sign that is furthest upstream from the TTC zone.)

Table 6H-4. Formulas for Determining Taper Length

Speed (S)	Taper Length (L) in feet
40 mph or less	$L = \frac{WS^2}{60}$
45 mph or more	$L = WS$

Where: L = taper length in feet
W = width of offset in feet
S = posted speed limit, or off-peak 85th-percentile speed prior to work starting, or the anticipated operating speed in mph

TRAFFIC CONTROL SYMBOLS AND FORMULAS FOR TAPER LENGTH

ALABAMA REGISTERED PROFESSIONAL ENGINEER NO. 19562 MAX A. MOBLEY 7-16-25

POLY

Date	Description	Revision

DESIGNED BY: M.A.M.
DRAWN BY: B.J.
DATE: MAY 2025
ENG / ARCH / SURVEYOR OF RECORD: REGISTRATION No.
Cert. of Auth. No. AL FL GA
ARCHITECT OA-0480 AA-C001005 001116
ENGINEER OE-782E OA-1818 001118

These drawings are copyrighted as the property of Poly-Inc. Any use, partial or full reproduction is prohibited without written consent with Poly-Inc. Agreement with Poly-Inc.

POLY, INC.
1935 Headland Avenue
Dothan, AL 36303
334-793-4700
102 Sunset Lane 117 Gemini Cir., Ste. 416
Shalimar, FL 32579 Birmingham, AL 35209
850-609-1100 205-913-0330
WWW.POLY-INC.COM

ARPA 2022 SEWER INFRASTRUCTURE IMPROVEMENTS
CONTRACT 1
TREATMENT AND COLLECTION SYSTEM IMPROVEMENTS
CWSRF PROJECT No. C501804-02
FOR THE
CITY OF BRUNDIDGE, ALABAMA

TRAFFIC CONTROL SIGNAGE

SHEET No.
C-14

PROJECT No.
14-203

Poly, Inc. - G:\CLEANSTUFF-10-14\14203 ARPA Water and Sewer Improvements\WIP\03-CIVIL\WTP\CONT 1 SYSTEM IMPROVEMENTS\14203_02_C-14_TRAFFIC CONTROL PLAN.dwg [C-16] Last Printed: July 16, 2025 - 11:41am By: JPeaden

ELECTRICAL SYMBOL LEGEND:

Miscellaneous Symbols

JUNCTION BOX. SIZE AS REQUIRED.

Power System Symbols

TVSS — TRANSIENT VOLTAGE SURGE SUPPRESSOR.

— MOTOR. # INDICATES MOTOR HORSEPOWER.

Raceway Symbols

LP-R — CONDUIT CONCEALED IN WALL OR ABOVE CEILING. ARROW INDICATES HOME RUN (PANEL "LP-R" INDICATED). NUMBER AND SIZE OF CONDUCTORS INDICATED, EITHER BY CALLOUTS OR HASHMARKS. NO HASHMARKS MEANS TWO (2) CONDUCTORS. THE NUMBER OF HASHMARKS DOES NOT INLCUDE THE GROUNDING CONDUCTOR. EMBEDDED NUMBER INDICATES WIRE SIZE IN AWG. NO NUMBER INDICATES 12 AWG. WIRING CALLOUTS SHALL USE THE FOLLOWING PATTERN: "3#3,1#8G – 1-1/2" C." MEANS THREE SIZE 3 AWG CONDUCTORS AND ONE SIZE 8 AWG GROUNDING CONDUCTOR, INSTALLED IN A 1-1/2" SIZE CONDUIT. THE TYPE OF CONDUIT IS DICTATED BY THE SPECIFICATIONS UNLESS NOTED.

CONDUIT CONCEALED IN FLOOR OR BELOW GRADE

EXPOSED CONDUIT

GENERAL ELECTRICAL NOTES:

1. SERVICE TO RAS PUMP STATION IS 120/240 VOLTS, 1 PHASE, 3 WIRE.
2. VERIFY EXACT LOCATION OF ALL MOTORS AND EQUIPMENT BEFORE ROUGHING IN.
3. CHECK THE CORRESPONDING MECHANICAL SHEETS AND INSTALL PROPER SERVICE AND CONNECTIONS TO ALL MECHANICAL SYSTEMS SHOWN THEREON, REGARDLESS OF ITS BEING OR NOT BEING SHOWN ON ELECTRICAL SHEETS.
4. FURNISH AND INSTALL FUSES IN FUSIBLE DISCONNECTS PER EQUIPMENT MANUFACTURER'S RECOMMENDATIONS.
5. A GREEN EQUIPMENT GROUNDING CONDUCTOR (SIZED PER THE NEC) SHALL BE INSTALLED IN EACH CONDUIT.
6. ALL WIRING DEVICES SHALL BE MOUNTED AS INDICATED IN THE SPECIFICATIONS UNLESS NOTED OTHERWISE IN THESE PLANS. ALL LIGHTING FIXTURES SHALL BE MOUNTED AS NOTED IN THE FIXTURE SCHEDULE UNLESS OTHERWISE INDICATED.
7. TYPICAL MOUNTING HEIGHTS:
   A. DISCONNECT SWITCHES, CONTROLLERS 6'-7" A.F.F. MAXIMUM
8. ALL EXTERIOR EXPOSED CONDUIT SHALL BE RIGID ALUMINUM, ALL EXTERIOR BOXES SHALL BE NEMA 4X STAINLESS STEEL.
9. PROVIDE ACCURATE AS-BUILTS OF ALL CONDUITS INCLUDING SITE PLAN, DUCT BANK DETAILS, AND ENLARGED PLANS AT PROJECT COMPLETION

ABBREVIATIONS:

ABV	ABOVE
AFC	ABOVE FINISHED COUNTER
AFCI	ARC-FAULT INTERRUPTING
AFF	ABOVE FINISHED FLOOR
AFG	ABOVE FINISHED GRADE
BFG	BELOW FINISHED GRADE
C	CONDUIT
CKT	CIRCUIT
CLG	CEILING
EGC	EQUIPMENT GROUNDING CONDUCTOR
EX	EXISTING
FDS	FUSED DISCONNECT SWITCH
FVNR	FULL-VOLTAGE NON-REVERSING (FOR STARTERS)
G	GROUND
GEC	GROUNDING ELECTRODE CONDUCTOR
GFCI	GROUND FAULT CIRCUIT INTERRUPTING
MAC	MOUNT ABOVE COUNTER
MTD	MOUNTED
NEC	NATIONAL ELECTRICAL CODE (NFPA 70).
NFDS	NON-FUSED DISCONNECT
TVSS	TRANSIENT VOLTAGE SURGE SUPPRESSOR
WP	WEATHER PROOF
4X SS	NEMA 4X STAINLESS STEEL

ALABAMA REGISTERED No. 21031 PROFESSIONAL ENGINEER JOSEPH WILLIAM BOWMAN
Joseph Bowman 7-16-25

Revision	Description	Date

DESIGNED BY: JWB
DRAWN BY: JDP
DATE: MAY 2025
ENG / ARCH / SURVEYOR OF RECORD REGISTRATION No.

Cert. of Auth. No.	AL	FL	GA
ARCHITECT	OA-0490	AA-C001051	001118
ENGINEER	OA-78-E	OA-1818	001118

These drawings are copyrighted and the property of Poly-Inc. Any use, partial or full reproduction is prohibited except by written Agreement with Poly-Inc.

POLY, INC.
1935 Headland Avenue
Dothan, AL 36303
334-793-4700
102 Sunset Lane 117 Gemini Cir., Ste. 418
Shalimar, FL 32579 Birmingham, AL 35209
850-609-1100 205-913-0330
WWW.POLY-INC.COM

ARPA 2022 SEWER INFRASTRUCTURE IMPROVEMENTS
CONTRACT 1
TREATMENT AND COLLECTION SYSTEM IMPROVEMENTS
OWSRP PROJECT No. C0501008-042
FOR THE
CITY OF BRUNDIDGE, ALABAMA

ELECTRICAL
LEGEND, NOTES
& ABBREVIATIONS

SHEET No.
E-01
PROJECT No.
14-203

Poly, Inc. - G:\CLEANSTUFF-10-14\14203 ARPA Water and Sewer Improvements\WIP\10-ELECTRICAL\WWTP\CONT 1 SYSTEM IMPROV\14203_E-01 LEGEND.dwg [Model] Last Printed: July 16, 2025 - 11:46am By: JPeaden

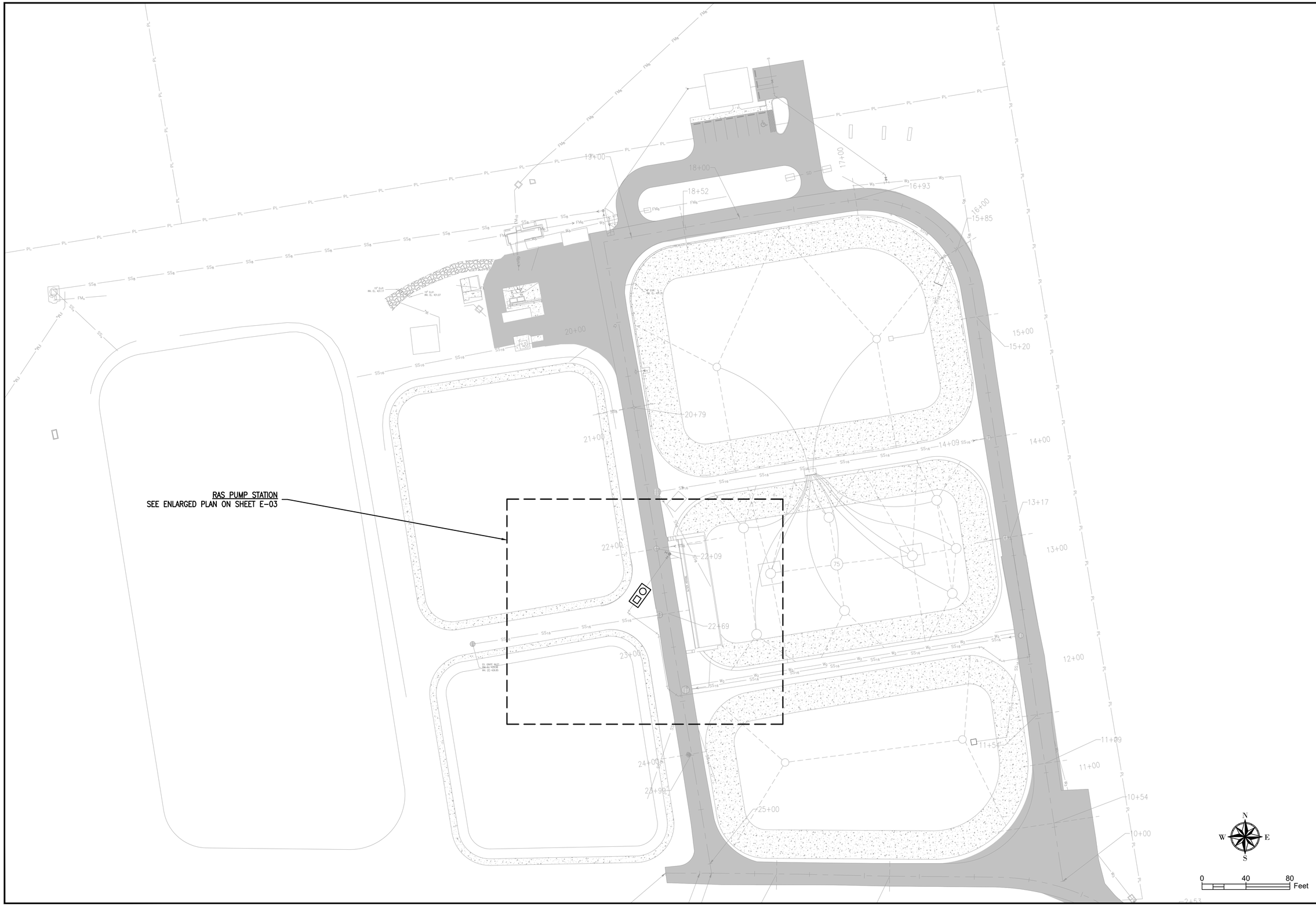

Poly, Inc. - G:\CLEANSTUFF-10-14114203 ARPA Water and Sewer Improvements\WIP\10-ELECTRICAL\WWTP\CONT 1 SYSTEM IMPROV\14203_E-02 OVERALL ELECT SITE PLAN.dwg [Layout1] Last Printed: July 16, 2025 - 11:46am By: JPeaden

ALABAMA REGISTERED No. 21031 PROFESSIONAL ENGINEER JOSEPH WILLIAM BOWMAN

Joseph W. Bowman
7-16-25

Revision	Description	Date

DESIGNED BY: MAM
DRAWN BY: JDP
DATE: MAY 2025

ENG / ARCH / SURVEYOR OF RECORD: REGISTRATION No.

Cert. of Auth. No.		AL	
ARCHITECT	CA-0480	FL	AA-C000550
ENGINEER	CA-78-E	GA	CA-1818

These drawings are copyrighted and the property of Poly-Inc. Any use, partial or full reproduction is prohibited except by written Agreement with Poly-Inc.

POLY, INC.
1935 Heartland Avenue
Dothan, AL 36303
334-793-4700
102 Sunset Lane
Shalimar, FL 32579
850-609-1100
117 Gemini Cir., Ste. 416
Birmingham, AL 35209
205-913-03330
WWW.POLY-INC.COM

ARPA 2022 SEWER INFRASTRUCTURE IMPROVEMENTS
CONTRACT 1
TREATMENT AND COLLECTION SYSTEM IMPROVEMENTS
CWSRF PROJECT No. CS0108044-02
FOR THE
CITY OF BRUNDIDGE, ALABAMA

OVERALL ELECTRICAL SITE PLAN

SHEET No.
E-02

PROJECT No.
14-203

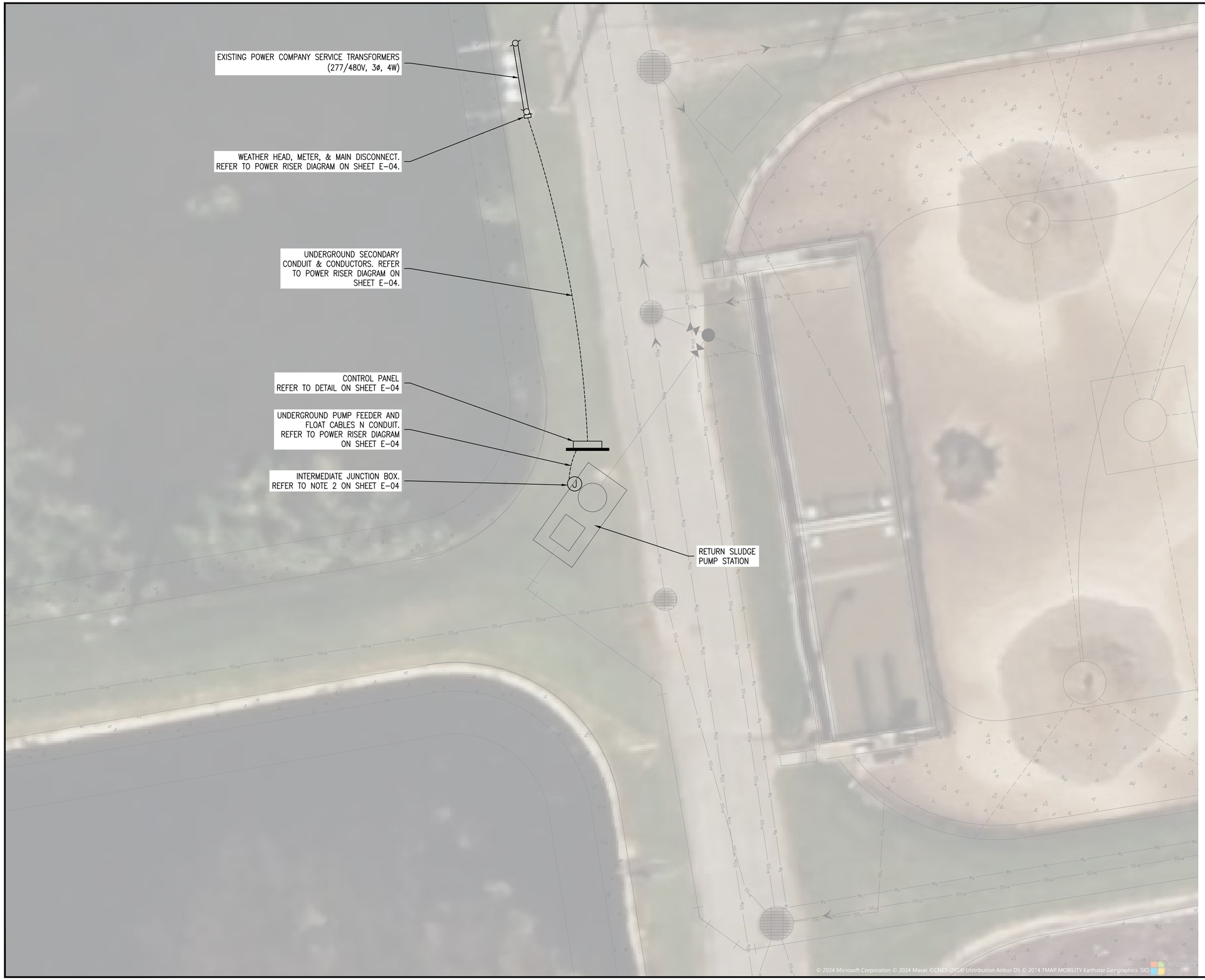

NOTES:

1. REFER TO SHEET E-04 FOR POWER RISER DIAGRAM.
2. REFER TO SHEET E-04 FOR DETAILS.
3. REFER TO SHEET E-02 FOR OVERALL ELECTRICAL SITE PLAN.
4. COORDINATE ALL SERVICE REQUIREMENTS WITH POWER COMPANY.

N W E S

0 10 20 Feet

ALABAMA REGISTERED No. 21031 PROFESSIONAL ENGINEER JOSEPH WILLIAM BOWMAN

Joseph Bowman 7-16-25

POLY

Revision	Description	Date

POLY, INC.
1935 Headland Avenue
Dothan, AL 36303
334-793-4700
102 Sunset Lane 117 Gemini Cir., Ste. 416
Shalimar, FL 32579 Birmingham, AL 35209
850-609-1100 205-913-0330
WWW.POLY-INC.COM

DESIGNED BY:	DRAWN BY:	DATE:
JWB	JDP	MAY 2025

ENG / ARCH / SURVEYOR OF RECORD:			REGISTRATION No.
Cert. of Auth. No.	AL	FL	GA
ARCHITECT	CA-1490	AA-C001051	001118
ENGINEER	CA-7876-E	CA-1818	001118

These drawings are copyrighted and the property of Poly-Inc. Any use, partial or full reproduction is prohibited without written Agreement with Poly-Inc.

ARPA 2022 SEWER INFRASTRUCTURE IMPROVEMENTS
CONTRACT 1
TREATMENT AND COLLECTION SYSTEM IMPROVEMENTS
OWSRF PROJECT No. CS0108084-02
FOR THE
CITY OF BRUNDIDGE, ALABAMA

ENLARGED SITE PLAN
RAS PUMP STATION

SHEET No.
E-03

PROJECT No.
14-203

Poly, Inc. - G:\CLEANSTUFF-10-14\14203 ARPA Water and Sewer Improvements\WIP\10-ELECTRICAL\WWTP\CONT 1 SYSTEM IMPROV\14203_E-03 ESP-RAS PUMP STATION.dwg [E-03] Last Printed: July 16, 2025 - 11:47am By: JPeaden

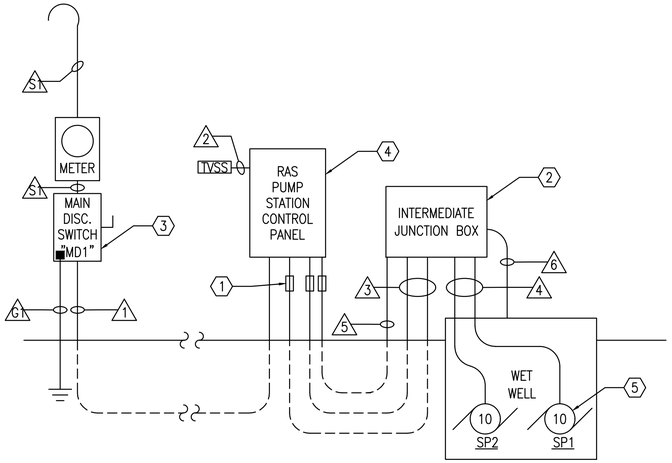

POWER RISER DIAGRAM - RAS PUMP STATION

SCALE: NONE

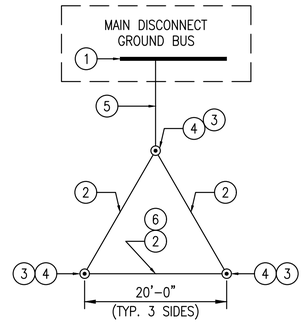

GROUNDING ELECTRODE SYSTEM DETAIL

SCALE: NONE

GROUNDING LEGEND

1. GROUND BUS LOCATED IN AUTOMATIC TRANSFER SWITCH
2. #2 BARE CU GROUND CONDUCTOR
3. EXOTHERMIC CONNECTION
4. 5/8" X 10'-0" LONG COPPER CLAD STEEL COPPERWELD GROUND ROD DRIVEN WITH TOP 1'-0" BELOW GRADE
5. REFER TO CONDUCTOR & CONDUIT SCHEDULE THIS SHEET
6. QUANTITY OF REQUIRED GROUND RODS TO BE DETERMINED PER SITE CONDITIONS

GENERAL ELECTRICAL NOTES:

1. SERVICE TO RAS PUMP STATION SHALL BE 277/480 VOLTS, 3-PHASE, 4-WIRE.
2. REFER TO SHEET E-03 FOR RAS PUMP STATION ENLARGED SITE PLAN.

NUMBERED NOTES

1. EXPLOSIVE GAS SEAL OFF FITTINGS (TYPICAL FOR POWER & CONTROL CONDUITS).
2. NEMA 4X ENCLOSURE WITH CONTINUOUS PIANO HINGE, FULL BACKPLANE, AND PADLOCKABLE HASP. SIZE AS REQUIRED. TERMINATE ALL CABLES USING APPROPRIATELY SIZED TERMINAL BLOCKS, MOUNTED TO BACKPLANE OF JUNCTION BOX. PROVIDE CABINET SEALING BUSHING EQUAL TO O-Z/GEDNEY CSB SERIES FOR ALL CONDUITS ENTERING JUNCTION BOX.
3. MAIN DISCONNECT "MD1" SHALL BE 100 AMP, 3-POLE, FUSED AT 100A, NEMA 4X STAINLESS STEEL ENCLOSURE.
4. RAS PUMP STATION CONTROL PANEL FURNISHED BY PUMP SUPPLIER, INSTALLED BY CONTRACTOR.
5. RAS SEWAGE PUMPS (SP1 & SP2) ARE MINIMUM 10HP. HOWEVER, 15HP PUMPS ARE USED AS BASIS OF SIZING ELECTRICAL DISTRIBUTION FOR ANY FUTURE UPGRADES.

PUMP STATION EQUIPMENT SIZES

MARK	ITEM DESCRIPTION	VOLTS/ PHASE	HP	AMPS	STARTER			REMARKS
					SIZE	TYPE	LOCATION	
SP1	SEWAGE PUMP NO. 1	480/3	10	14	NEMA 2	FVNR	CONTROL PANEL	STARTER & DISCONNECT SUPPLIED WITH PUMP STATION CONTROL PANEL
SP2	SEWAGE PUMP NO. 2	480/3	10	14	NEMA 2	FVNR	CONTROL PANEL	STARTER & DISCONNECT SUPPLIED WITH PUMP STATION CONTROL PANEL

POWER RISER DIAGRAMS CONDUCTOR & CONDUIT SCHEDULE

TAG NO.	CONDUCTORS	CONDUIT	FROM	TO	NOTES
S1	4#2	1 1/2"C.	SERVICE RISER POLE & WEATHERHEAD	METER & MAIN DISCONNECT	277/480 VOLTS, 3-PHASE, 4-WIRE
G1	1#6G	1"C.	MAIN DISCONNECT "MD1"	SYSTEM GROUND	REFER TO GROUNDING DETAIL THIS SHEET
1	4#2, 1#6G	1 1/2"C.	MAIN DISCONNECT "MD1"	RAS PUMP STATION CONTROL PANEL	
2	4#10, 1#10G	1"C.	RAS PUMP STATION CONTROL PANEL	TVSS	TVSS SHALL INCLUDE INTEGRAL DISCONNECT
3	TWO RUNS OF 3#8, 1#10G	2 RUNS OF 1"C.	RAS PUMP STATION CONTROL PANEL	INTERMEDIATE JUNCTION BOX	
4	TWO RUNS OF 3#8, 1#10G PUMP CABLES	2 RUNS OF 1"C.	INTERMEDIATE JUNCTION BOX	WET WELL PUMPS	
5	INSTRUMENT CABLES	2 RUNS OF 1"C.	RAS PUMP STATION CONTROL PANEL	INTERMEDIATE JUNCTION BOX	FOR FLOATS, SEAL FAILURE(S), & OVERTEMP(S)
6	INSTRUMENT CABLES	1"C.	INTERMEDIATE JUNCTION BOX	WET WELL	FOR FLOATS

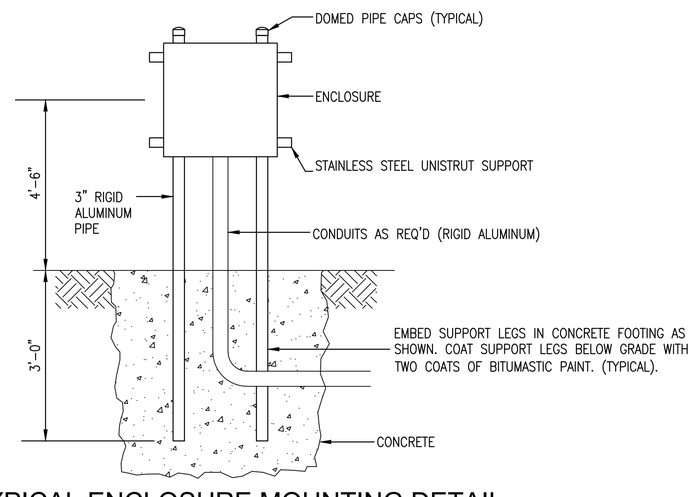

TYPICAL ENCLOSURE MOUNTING DETAIL

SCALE: NONE

NOTES:

1. BOND STEEL TO GROUND

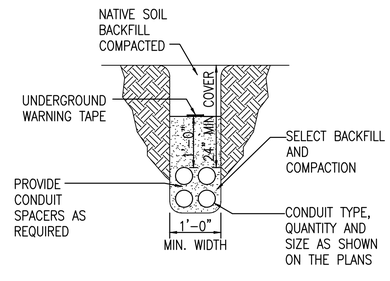

DUCT IN TRENCH (TYP.)

SCALE: NONE

ALABAMA REGISTERED No. 21031 PROFESSIONAL ENGINEER JOSEPH WILLIAM BOWMAN
7-16-25

Revision	Description	Date

DESIGNED BY: JWB
DRAWN BY: JDP
DATE: MAY 2025
ENG / ARCH / SURVEYOR OF RECORD | REGISTRATION No.
Cert. of Auth. No. | AL | FL | GA.
ARCHITECT CA-6480 | AA-C001053 | 001118 | 001118
ENGINEER CA-7842 | CA-1918 | 001118

POLY, INC.
1935 Headland Avenue
Dothan, AL 36303
334-793-4700
102 Sunset Lane 117 Gemini Cir., Ste. 416
Shalimar, FL 32579 Birmingham, AL 35209
850-609-1100 205-913-0330
WWW.POLY-INC.COM

These drawings are copyrighted and the property of Poly-Inc. Any use, partial or full reproduction is prohibited except by written Agreement with Poly-Inc.

ARPA 2022 SEWER INFRASTRUCTURE IMPROVEMENTS CONTRACT 1
TREATMENT AND COLLECTION SYSTEM IMPROVEMENTS
CWSRF PROJECT No. C341080440-02
FOR THE
CITY OF BRUNDIDGE, ALABAMA

POWER RISER DIAGRAMS

SHEET No.
E-04

PROJECT No.
14-203

Poly, Inc. - G:\CLEANSTUFF-10-14\14203 ARPA Water and Sewer Improvements\WIP\10-ELECTRICAL\WWTP\CONT 1 SYSTEM IMPROV\14203_E-04 POWER RISER DIAGRAMS.dwg [Model] Last Printed: July 16, 2025 - 11:44am By: JPeaden