C:\InSite\InSite Engineering LLC\Rome 25124.00 - Blacks Bluff WWTP 2025 Upgrades - Documents\03 - Design Phase\03.50 - Cad Design\01 - Cad\0_General.dwg

DRAWING INDEX

DRAWING NO.	SHEET NO.	DESCRIPTION
GN-1	1	COVER SHEET, SITE LOCATION, AND DRAWING INDEX
GN-2	2	STANDARD LEGEND AND ABBREVIATIONS
GN-3	3	GENERAL NOTES
OV-1	4	OVERALL SITE
YP-1	5	YARD PIPING
DM-1	6	DEMOLITION PLAN
DM-2	7	DEMOLITION SECTIONS
CL-1	8	PROPOSAL PLAN
CL-2	9	PROPOSAL SECTIONS
DT-1	10	EROSION CONTROL DETAILS
DT-2	11	MISCELLANEOUS METALS DETAILS

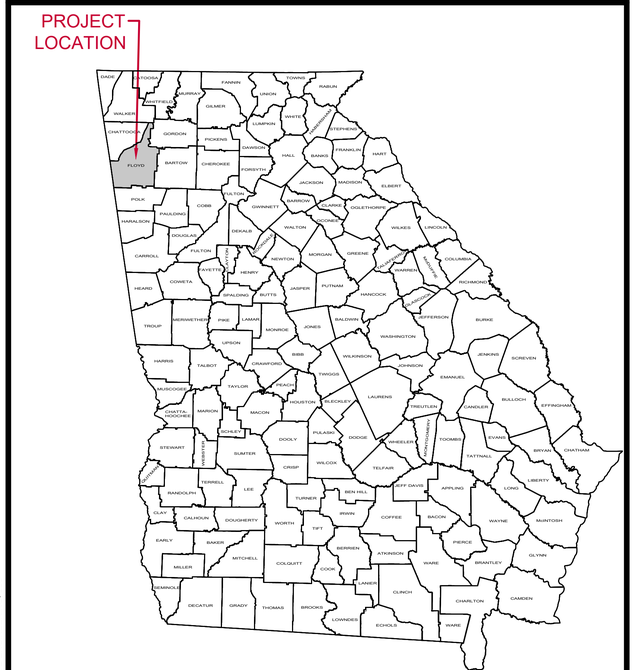

COUNTY LOCATION

SCALE: NONE

BLACKS BLUFF WRF SECONDARY CLARIFIER NO. 2 REHAB

PREPARED FOR:

ROME, GEORGIA

PREPARED BY:

INSITE ENGINEERING, LLC.

5800 FELDSPAR WAY
HOOVER, ALABAMA 35244
OFFICE (205) 733-9696
www.insiteengineering.org



LOCATION MAP

SCALE: NONE

INSITE ENGINEERING

HOOVER | TUSCALOOSA

5800 FELDSPAR WAY
HOOVER, ALABAMA 35244
OFFICE (205) 733-9696
FAX (205) 733-9697

CIVIL / GIS
INFRASTRUCTURE
ENVIRONMENTAL
PLANNING
COMMERCIAL
RESIDENTIAL

CONSTRUCTION PLANS FOR:

BLACKS BLUFF WRF SECONDARY CLARIFIER NO. 2 REHAB

ROME, GEORGIA

REVIEW DRAWING
(NOT FOR CONSTRUCTION)

PROJECT INFO:

INSITE - HOOVER

INSITE JOB No. 25124.00

PLOTTED: 05/27/25

ISSUED FOR REVIEW

PRELIMINARY
(NOT FOR CONSTRUCTION)

THIS SHEET CONTAINS:

COVER SHEET, SITE LOCATION, AND DRAWING INDEX

SHEET 1 OF 11

GN-1

THIS DRAWING AND THE DESIGN SHOWN IS THE PROPERTY OF INSITE ENGINEERING, LLC
THE REPRODUCTION, COPYING OR UTILIZATION OF THIS DRAWING IN WHOLE OR IN PART
WITHOUT THE EXPRESS CONSENT OF INSITE ENGINEERING, LLC IS PROHIBITED.
CONSENT IS PROHIBITED AND ANY INFRINGEMENT WILL BE SUBJECT TO LEGAL ACTION.
COPYRIGHT, © 2026, INSITE ENGINEERING, LLC

C:\InSite\InSite Engineering LLC\Rome 25124.00 - Blacks Bluff WWTP 2025 Upgrades - Documents\03 - Design Phase\03.50 - Cad Design\01 - Cad\0_General.dwg

ABBREVIATIONS

ACQ'D	ACQUIRED
AC	ACRE
ALDOT	ALABAMA DEPARTMENT OF TRANSPORTATION
AVE	AVENUE
BM	BENCH MARK
BLDG	BUILDING
BLVD	BOULEVARD
CIP	CAST IRON PIPE
℄	CENTER LINE
CL	CLASS
CONC	CONCRETE
COR	CORNER
CFS	CUBIC FEET PER SECOND
CY	CUBIC YARD
C & G	CURB AND GUTTER
Q	DESIGN FLOW
DIST	DISTANCE
DBL	DOUBLE
Da	DRAINAGE AREA
DI	DUCTILE IRON PIPE
ESMT	EASEMENT
EL	ELEVATION
F	FLOW LINE
FPS	FEET PER SECOND
GAL	GALLON
GPM	GALLONS PER MINUTE
GPD	GALLONS PER DAY
HDWL	HEADWALL
HWEL	HEADWATER ELEVATION
HP	HIGH POINT
HWL	HIGH WATER LEVEL
HORIZ	HORIZONTAL
INV	INVERT
JCT	JUNCTION
JB	JUNCTION BOX
LF	LINEAR FEET
LP	LOW POINT
MB	MAIL BOX
MH	MANHOLE
MP	MILEPOST
MGD	MILLION GALLONS PER DAY
NWL	NORMAL WATER LEVEL
N	NORTHING
PC	POINT OF CURVATURE
PI	POINT OF INTERSECTION
PT	POINT OF TANGENCY
POT	POINT ON TANGENT
LB	POUND
P	PROPERTY LINE
RR	RAILROAD
R	RANGE
RCP	REINFORCED CONCRETE PIPE
REQ'D	REQUIRED
ROW	RIGHT OF WAY
RD	ROAD
SS	SANITARY SEWER
SEC	SECTION
SHLDR	SHOULDER
SD	SIDE DRAIN
SY	SQUARE YARD
STA	STATION
ST	STREET
TBM	TEMPORARY BENCH MARK
T	TOWNSHIP
VERT	VERTICAL
VLF	VERTICAL FEET
VPC	VERTICAL POINT OF CURVE
VPI	VERTICAL POINT OF INTERSECTION
VPT	VERTICAL POINT OF TANGENT
VCP	VITRIFIED CLAY PIPE
WL	WATER LEVEL
W	WATER MAIN

STANDARD LEGEND

EXISTING	PROPOSED	
		SIDEWALK
		UNPAVED ROAD OR DRIVEWAY
		PAVED ROAD OR DRIVEWAY
		PAVED ROAD WITH GUTTER
		DRAIN WITH HEADWALL (SIZE AND TYPE STRUCTURE NOTED)
		EXISTING BRIDGE, BOX CULVERT, OR STORM DRAIN (SIZE AND TYPE STRUCTURE NOTED) WALK BRIDGE
		RAILROAD TRACK SINGLE
		RAILROAD TRACK DOUBLE
M.P. 129		RAILROAD MILEPOST
		OUTDOOR ADVERTISING SIGN
		MASONRY WALL (NOTE TYPE)
		MAILBOX
		CLOTHES LINE AND POLES (NOTED)
		WELL
		LEVEE OR EARTH DAM
		WOOD FENCE
		HOG WIRE OR BARBED WIRE FENCE
		CHAIN LINK FENCE
		DROP INLET (NOTED)

EXISTING	PROPOSED	UTILITIES
		SANITARY SEWER MANHOLE
		SANITARY SEWER GRAVITY LINE (NOTE DIA. OF PIPE IF KNOWN)
		SANITARY SEWER FORCE LINE (ARROW INDICATES FLOW)
		UTILITY MANHOLE (NOTE TYPE IN CIRCLE - P,T,ETC.)
		POWER JUNCTION BOX
		POWER POLE
		LIGHT POLE (NOTE TYPE)
		HIGH VOLTAGE TRANSMISSION POLE OR TOWER
		UNDERGROUND POWER CONDUIT
		OVERHEAD POWER LINES
		TELEPHONE JUNCTION BOX
		UNDERGROUND TELEPHONE CONDUIT
		OVERHEAD TELEPHONE LINES
		OVERHEAD TELEPHONE AND POWER LINES
		GUY POLE
		UTILITY POLE ANCHOR
		GAS LINE MARKER (NOTED)
		GAS METER
		GAS LINE (NOTE DIA. OF PIPE IF KNOWN)
		GAS VALVE
		WATER VALVE
		WATER LINE (NOTE DIA. OF PIPE IF KNOWN)
		WATER METER
		FIRE HYDRANT

NATURAL

	TREES. (DRAW DOT TO SCALE OF TREE)
	HEDGES OR SHRUBBERY
	SHRUB
	FLOWER BED, GARDEN, OR ROCK GARDEN (NOTED)
	LAKE OR POND
	SWAMP, MARSH, ETC.
	DITCH OR STREAM (ARROW INDICATES DIRECTION OF FLOW)
	EARTH
	ROCK

	WATTLE DITCH CHECK DAM
	SILT FENCE
	HEADWALL
	DOUBLE WING CURB INLET
	SINGLE WING CURB INLET
N 9,952.45 E 9,439.16	NORTHING & EASTING
STRUCTURE NUMBER; LINE NUMBER; LINE: SL-1 N= 1210812.28 E= 2217825.67; 1 ST-1; PROFILE SHEET NUMBER	DRAINAGE CALLOUT

EXISTING PROPOSED SURVEY

EXISTING	PROPOSED	
	PI	PROPERTY IRON (SIZE AND TYPE NOTED)
		PROPERTY LINE
		SECTION CORNER OR ¼ SECTION CORNER IRON (SIZE, TYPE, AND DESCRIPTION NOTED)
		¼ OR ¼ - ¼ SECTION LINE
		SECTION LINE
	R/W	RIGHT OF WAY MONUMENTS (NOTED FOR EXISTING)
	ROW	ROW LINE
		CONSTRUCTION LIMITS
	ESMT	EASEMENT
		CONSTRUCTION EASEMENT

NORTH ARROW

Know what's **Call** before you dig. **below.**

THIS DRAWING AND THE DESIGN SHOWN IS THE PROPERTY OF INSITE ENGINEERING, LLC
THIS DRAWING IS COPYRIGHTED AND IS NOT TO BE USED IN WHOLE OR IN PART
WITHOUT THE WRITTEN PERMISSION OF INSITE ENGINEERING, LLC. USE OF THIS DRAWING WITHOUT SUCH
CONSENT IS PROHIBITED AND ANY INFRINGEMENT WILL BE SUBJECT TO LEGAL ACTION.
COPYRIGHT © 2026, INSITE ENGINEERING, LLC

INSITE ENGINEERING
HOOVER | TUSCALOOSA
5800 FELDSPAR WAY
HOOVER, ALABAMA 35244
OFFICE (205) 733-9696
FAX (205) 733-9697
CIVIL / GIS
INFRASTRUCTURE
ENVIRONMENTAL
PLANNING
COMMERCIAL
RESIDENTIAL

CONSTRUCTION PLANS FOR:
BLACKS BLUFF WRF SECONDARY CLARIFIER NO. 2 REHAB
ROME, GEORGIA

REVIEW DRAWING
(NOT FOR CONSTRUCTION)

PROJECT INFO:
INSITE - HOOVER
INSITE JOB No. 25124.00
PLOTTED: 05/27/25
ISSUED FOR REVIEW

PRELIMINARY
(NOT FOR CONSTRUCTION)

THIS SHEET CONTAINS:
STANDARD LEGEND AND ABBREVIATIONS

SHEET 2 OF 11

GN-2

C:\InSite\InSite Engineering LLC\Rome 25124.00 - Blacks Bluff WWTP 2025 Upgrades - Documents\03 - Design Phase\03.50 - Cad Design\01 - Cad\0_General.dwg

GENERAL NOTES

1. CONTRACTOR SHALL COORDINATE BETWEEN ARCHITECTURAL, MECHANICAL, STRUCTURAL, ELECTRICAL, AND OTHER DRAWINGS. ANY DISCREPANCIES BETWEEN DRAWINGS OF DIFFERENT DISCIPLINES SHALL BE IMMEDIATELY BROUGHT TO THE ATTENTION OF THE ENGINEER.

2. UNDERGROUND UTILITY LOCATIONS SHOWN ARE FROM UTILITY COMPANY RECORDS OR FROM LINE LOCATOR MARKS AND ARE SHOWN IN APPROXIMATE MANNER ONLY. CONTRACTOR SHALL FIELD VERIFY THE EXISTENCE, LOCATION, SIZE, AND TYPE OF ANY AND ALL UTILITY LINES PRIOR TO BEGINNING ANY CONSTRUCTION. CONTRACTOR IS RESPONSIBLE FOR ANY DAMAGE TO EXISTING UTILITIES AS A RESULT OF HIS CONSTRUCTION OPERATIONS.

3. CONTRACTOR IS SOLELY RESPONSIBLE FOR CONSTRUCTION METHODS, SEQUENCES, PROCEDURES, AND JOB SITE SAFETY. THE CONTRACTOR SHALL TAKE ALL MEANS NECESSARY TO MAINTAIN AND PROTECT THE INTEGRITY OF ALL CONSTRUCTION (NEW AND EXISTING) AT ALL STAGES. ENGINEER ASSUMES NO LIABILITY FOR SAFETY ON THE JOB SITE.

4. ALL UTILITIES WITHIN ROADWAY SHALL BE BACKFILLED COMPLETELY WITH STONE UNLESS OTHERWISE DIRECTED BY THE GEOTECHINAL ENGINEER OR THE GOVERNING AUTHORITY.

5. ALL AREAS WHICH WILL LIE UNDER NEW STRUCTURES, PAVING, CONCRETE, OR WALKWAYS SHALL BE COMPACTED TO 100% STANDARD PROCTOR DENSITY OR AS DIRECTED BY GEOTECHNICAL ENGINEER.

6. ALL PERMITS, OTHER THAN THOSE LISTED IN THE SPECIFICATIONS, FOR THE DEVELOPMENT OF THESE PLANS ARE THE CONTRACTORS RESPONSIBILITY AND SHOULD BE OBTAINED PRIOR TO DISTURBING ANY AREAS OR BEGINNING ANY CONSTRUCTION.

7. CONTRACTOR SHALL BE RESPONSIBLE FOR REMOVAL AND LEGAL DISPOSAL OF ALL MATERIALS AND DEBRIS NOT ACCEPTABLE TO THE OWNER.

8. CONTRACTOR SHALL COORDINATE HIS WORK WITH ALL OTHER CONCURRENT WORK BEING PERFORMED IN THE AREA.

9. CONTRACTOR IS RESPONSIBLE FOR ENSURING ALL FACILITIES AND PROCESSES STAY ACTIVE DURING CONSTRUCTION. SHUT DOWNS SHOULD BE SCHEDULED WITH THE OWNER AND ENGINEER AS OUTLINED IN THE SPECIFICATIONS.

GRADING NOTES

1. ENGINEER TO BE PROVIDED AT LEAST 24 HOURS NOTICE PRIOR TO THE STARTING OF EACH PHASE OF WORK.

2. ALL PERMITS/APPROVALS BY ADEM, ALDOT, FEMA, CORPS OF ENGINEERS WILL BE REQUIRED PRIOR TO DISTURBING AREAS UNDER JURISDICTIONS OF SUCH PERMITS.

3. THERE SHALL BE NO LAND DISTURBING ACTIVITY UNTIL PROOF OF ADEM NOR COVERAGE IS PROVIDED TO THE ENGINEER AND ADEQUATE EROSION CONTROL MEASURES ARE IN PLACE.

4. ELEVATIONS SHOWN ARE FINISHED GRADE. THE CALCULATION OF THE APPROPRIATE SUBGRADE ELEVATIONS SHALL BE THE RESPONSIBILITY OF THE CONTRACTOR. SUBGRADE ELEVATIONS SHALL VARY IN ACCORDANCE WITH THE SURFACE TREATMENT CALL FOR ON THESE PLANS (I. E. ASPHALT PAVEMENT, CONCRETE PAVEMENT, SIDEWALK, TOPSOIL, ETC.) AND THE RELATED SECTIONS OR DETAILS.

5. CONTRACTOR SHALL ENSURE POSITIVE DRAINAGE AT ALL TIMES.

6. ALL CUT AND FILL SIDE SLOPES ARE 2:1 UNLESS NOTED OTHERWISE.

7. CLEARING LIMITS TO BE 5' OUTSIDE OF TOE AND TOP OF SLOPE.

EROSION CONTROL NOTES

1. ALL EROSION CONTROL PERMITS FOR THE DEVELOPMENT OF THESE PLANS SHALL BE OBTAINED BY THE CONTRACTOR PRIOR TO ANY GROUND DISTURBANCE.

2. EROSION CONTROL MEASURES ARE TO BE INSTALLED PRIOR TO BEGINNING ANY OTHER CONSTRUCTION ON THE JOB SITE.

3. CONTRACTOR IS RESPONSIBLE FOR INSTALLING, MAINTAINING, AND REMOVING ALL EROSION AND SEDIMENT CONTROLS IN ACCORDANCE WITH BEST MANAGEMENT PRACTICES AS SHOWN ON THESE DRAWINGS OR REQUIRED BY LOCAL, STATE, AND/OR FEDERAL REGULATORY AUTHORITIES.

4. THE EROSION AND SEDIMENT CONTROL MEASURES SHOWN ON THESE DRAWINGS ARE CONSIDERED THE MINIMUM ACCEPTABLE AND SHALL BE MODIFIED IN THE FIELD AS NECESSARY TO COMPLY WITH LOCAL, STATE, AND/OR FEDERAL REQUIREMENTS.

5. EROSION CONTROL MEASURES MUST BE MAINTAINED UNTIL PERMANENT GROUND COVER IS ESTABLISHED AND THE NPDES PERMIT IS TERMINATED.

6. ALL DISTURBED AREAS NOT SHOWN TO BE LANDSCAPED SHALL BE SEEDED & MULCHED AS PER LOCAL STANDARDS AND SPECIFICATIONS.

7. CONTRACTOR SHALL COMPLY WITH ALL LOCAL, STATE, AND FEDERAL REGULATIONS RELATING TO THE ONSITE STORAGE OF FUEL, OIL, AND GREASE. AN SPCC PLAN MUST BE MAINTANED AND IMPLEMENTED ON SITE.

8. STREAMS SHALL NOT BE USED AS TRANSPORTATION ROUTES FOR HEAVY EQUIPMENT. CROSSINGS SHALL BE LIMITED TO ONE POINT AND EROSION CONTROL MEASURES MUST BE UTILIZED WHERE STREAM BANKS AND DRAINAGE DITCHES ARE DISTURBED.

GROUT - STRUCTURES

A. CONFORM TO THE FOLLOWING:
   1. ASTM C1107.

B. USE THE FOLLOWING MATERIALS:
   1. DRY NON-SHRINK HYDRAULICN CEMENTITIOUS GROUT: ASTM C1107 GRADE C/S2, PREMIXED, PACKAGED, NON-METALLIC, MINIMUM 28 DAY COMPRESSIVE STRENGTH IS 5000 PSI. PER ASTM C109. WATER TO CEMENT RATIO SHALL BE 0.45 MAX.
   2. WATER: POTABLE.

C. CONTRACTOR SHALL:
   1. STORE AND MAINTAIN PACKAGED MATERIALS CLEAN AND DRY AND PROTECTED FROM DAMPNESS, FREEZING AND FOREIGN MATERIALS.
   2. MAINTAIN GROUT AT A MINIMUM 50 DEGREES F. AND MAXIMUM 90 DEGREES F. PRIOR TO, DURING AND 48 HOURS AFTER COMPLETION OF GROUT WORK.
   3. SATURATE SURFACE WITH CLEAN WATER 24 HOURS PRIOR TO GROUTING OPERATIONS. REMOVE ANY FREE STANDING WATER ON SURFACE AND IN ANCHOR ROD HOLES PRIOR TO GROUTING.
   4. MIX PACKAGED MATERIALS IN ACCORDANCE WITH MANUFACTURER'S PRINTED INSTRUCTION.
   5. PLACE GROUT IN ACCORDANCE WITH MANUFACTURER'S PRINTED INSTRUCTIONS COMPLETELY FILLING ALL VOIDS. DO NOT VIBRATE GROUT. BEVEL EDGES OF TROWELABLE GROUT.

EROSION CONTROL PLAN AND PERFORMANCE STANDARDS

1. THE EROSION CONTROL PLAN SHALL CONTAIN A DESCRIPTION OF THE EXISTING SITE CONDITIONS, A DESCRIPTION OF ADJACENT TOPOGRAPHICAL FEATURES, INFORMATION NECESSARY TO DETERMINE THE EROSION QUALITIES OF THE SOIL ON THE SITE, POTENTIAL PROBLEM AREAS OF SOIL EROSION AND SEDIMENTATION, SOIL STABILIZATION SPECIFICATIONS, STORM WATER MANAGEMENT CONSIDERATIONS, PROJECTED TIME SCHEDULE FOR COMMENCEMENT AND COMPLETION OF THE LAND-DISTURBING ACTIVITY, SPECIFICATIONS FOR BMP PLAN MAINTENANCE DURING THE PROJECT AND AFTER THE COMPLETION OF THE PROJECT, CLEARING AND GRADING LIMITS, AND ALL OTHER INFORMATION NEEDED TO DEPICT ACCURATELY THE SOLUTIONS TO POTENTIAL SOIL EROSION AND SEDIMENTATION PROBLEMS TO THE MS4. THE CONTROL PLAN SHALL INCLUDE THE SERIES OF BMP'S AND SHALL BE REVIEWED BY, AND SUBJECT TO THE APPROVAL OF, THE OFFICIAL PRIOR TO THE ISSUANCE OF THE PERMIT.

2. CONTROL MEASURES SHALL BE MAINTAINED AS AN EFFECTIVE BARRIER TO SEDIMENTATION AND EROSION IN ACCORDANCE WITH THIS PLAN.

3. THERE SHALL BE NO DISTINCTLY VISIBLE FLOATING SCUM, OIL OR OTHER MATTER CONTAINED IN THE STORM WATER DISCHARGE. THE STORM WATER DISCHARGE TO AN MS4 MUST NOT CAUSE AN UNNATURAL COLOR (EXCEPT DYES OR OTHER SUBSTANCES DISCHARGED TO AN MS4 FOR THE PURPOSE OF ENVIRONMENTAL STUDIES AND WHICH DO NOT HAVE HARMFUL EFFECT ON THE BODIES OF WATER WITHIN THE MS4) OR ODOR IN THE COMMUNITY WATERS. THE STORM WATER DISCHARGE TO THE MS4 MUST RESULT IN NO MATERIALS IN CONCENTRATIONS SUFFICIENT TO BE HAZARDOUS OR OTHERWISE DETRIMENTAL TO HUMANS, LIVESTOCK, WILDLIFE, PLANT LIFE OR FISH AND AQUATIC LIFE IN THE COMMUNITY WATERS.

EROSION CONTROL SEQUENCE

ALL CONSTRUCTION SHALL BE DONE IN A LOGICAL SEQUENCE SO TO MINIMIZE THE AREA OF DISTURBANCE.

1. OBTAIN REQUIRED PERMITS.
2. STAKE PROPERTY LINES AND CLEARING LIMITS.
3. SELECTIVELY CLEAR PATH AS REQUIRED TO INSTALL SILT FENCING AND PERIMETER EROSION CONTROL MEASURES.
4. INSTALL SILT FENCES ALONG SIDE SLOPE BOUNDARIES.
5. INSTALL STONE ENTRANCE DRIVE.
6. PROTECT STORM DRAIN INLETS DOWNSTREAM OF CONSTRUCTION WITH HAY BALES, WATTLES, SILT FENCE AND/OR OTHER PROTECTIVE MEASURES.
7. INSTALL OTHER REQUIRED EROSION CONTROL MEASURES DOWNSTREAM OF PROJECT AREA.
8. PERFORM CLEARING AND GRUBBING.
9. INSTALL SILT FENCE AROUND STOCKPILES.
10. BEGIN EARTHWORK AND CONSTRUCT PROJECT.
11. MODIFY AND MAINTAIN EROSION CONTROL AS REQUIRED DURING CONSTRUCTION.
12. INSPECT ALL EROSION CONTROL MEASURES AFTER EVERY 0.50" RAINFALL. COPIES OF ALL INSPECTION REPORTS SHALL BE SUBMITTED TO THE PROPER AUTHORITIES IN ACCORDANCE WITH APPLICABLE PERMITS.
13. TEMPORARILY OR PERMANENTLY STABILIZE STRIPPED AREAS AND STOCKPILES LEFT INACTIVE FOR 14 OR MORE CALENDAR DAYS.
14. REMOVE ANY SEDIMENT REACHING PUBLIC OR PRIVATE ROADWAYS BY STREET CLEANING BEFORE THE END OF EACH DAY. FLUSHING OF STREETS WILL NOT BE ALLOWED.
15. INSTALL TEMPORARY SEDIMENTATION PONDS OR DIVERSION BERMS AS NEEDED TO CONTROL THE FLOW OF WATER AND COLLECTION OF SEDIMENT DURING THE PROJECT.
16. COMPLETE FINE GRADING AND INSTALL PERMANENT SEEDING AND PLANTING.
17. COMPLETE FINAL PAVING FOR ROADS.
18. REMOVE SILT FENCE UPON COMPLETION OF ALL CONSTRUCTION ACTIVITY.
19. RESEED AND STABILIZE ANY BARE SPOTS OR WASHOUTS.
20. TERMINATE ALL PERMITS.

THIS DRAWING AND THE DESIGN SHOWN IS THE PROPERTY OF INSITE ENGINEERING, LLC THE REPRODUCTION, COPYING OR ASSIGNMENT TO ANY PERSON OR ENTITY WITHOUT THE WRITTEN CONSENT IS PROHIBITED AND ANY INFRINGEMENT WILL BE SUBJECT TO LEGAL ACTION.
COPYRIGHT, © 2026, INSITE ENGINEERING, LLC

INSITE ENGINEERING
HOOVER | TUSCALOOSA
5800 FELDSPAR WAY
HOOVER, ALABAMA 35244
OFFICE (205) 733-9696
FAX (205) 733-9697
CIVIL / GIS
INFRASTRUCTURE
ENVIRONMENTAL
PLANNING
COMMERCIAL
RESIDENTIAL

CONSTRUCTION PLANS FOR:
BLACKS BLUFF WRF SECONDARY CLARIFIER NO. 2 REHAB
ROME, GEORGIA

REVIEW DRAWING
(NOT FOR CONSTRUCTION)

PROJECT INFO:
INSITE - HOOVER
INSITE JOB No. 25124.00
PLOTTED: 05/27/25
ISSUED FOR REVIEW

PRELIMINARY
(NOT FOR CONSTRUCTION)

THIS SHEET CONTAINS:
GENERAL NOTES



INSITE ENGINEERING
HOOVER | TUSCALOOSA
5800 FELDSPAR WAY
HOOVER, ALABAMA 35244
OFFICE (205) 733-9696
FAX (205) 733-9697
CIVIL / GIS
INFRASTRUCTURE
ENVIRONMENTAL
PLANNING
COMMERCIAL
RESIDENTIAL

CONSTRUCTION PLANS FOR:

BLACKS BLUFF WRF SECONDARY CLARIFIER NO. 2 REHAB

ROME, GEORGIA

REVIEW DRAWING
(NOT FOR CONSTRUCTION)

PROJECT INFO:
INSITE - HOOVER
INSITE JOB No. 25124.00
PLOTTED: 03/06/26
ISSUED FOR REVIEW

PRELIMINARY
(NOT FOR CONSTRUCTION)

THIS SHEET CONTAINS:
OVERALL SITE

SHEET 4 OF 11

OV-1

C:\InSite\InSite Engineering LLC\Rome 25124.00 - Blacks Bluff WWTP 2025 Upgrades - Documents\03 - Design Phase\03.50 - Cad Design\01 - Cad\0_Clarifier Site.dwg

THIS DRAWING AND THE DESIGN SHOWN IS THE PROPERTY OF INSITE ENGINEERING, LLC
THEY ARE NOT TO BE USED IN WHOLE OR PART FOR ANY PROJECT WITHOUT THE WRITTEN
CONSENT IS PROHIBITED AND ANY INFRINGEMENT WILL BE SUBJECT TO LEGAL ACTION.
COPYRIGHT © 2026, INSITE ENGINEERING, LLC

C:\InSite\InSite Engineering LLC\Rome 25124.00 - Blacks Bluff WWTP 2025 Upgrades - Documents\03 - Design Phase\03.50 - Cad Design\01 - Cad\0_Yard Piping.dwg

SECONDARY CLARIFIER NO. 5
N.I.C.

AERATION BASIN NO. 1
A-T-1

AERATION BASIN NO. 2
A-T-2

SECONDARY CLARIFIER SCL-T-3

SECONDARY CLARIFIER SCL-T-4

CLARIFIER #2
SCL-T-2

SPLITTER BOX NO. 4
SPL-4

SCUM BEACH
33.75°

DROP BOX
33.75°

SCUM PUMP STATION

RAS/WAS PUMP STATION

THK-T-1

SLUDGE THICKENER

PRIMARY SL METER VAULT NO.2

WAS METER VAULT

AERATION BLOWER BANK
FF = 584.48'

CHLORINE BUILDING
FIN.FLOOR = 580.12'

SUB-STATION

JUNCTION BOX "B"

JUNCTION BOX NO.2

RELOCATE 2"PW

6"UW-DIP(RJ)

3"GV

3"UW-PVC

MH PD-A3

MH PD-A4

MH PD-A2

16"PD-DIP @ 0.12%

10" V.C.P.

24" R.C.P.

15" R.C.P.

1 1/2"UW-PVC

12"AIR-STL

8"AIR-STL

CONNECT TO EXIST.48"

PLUG W/CONC.

48" PL-DIP

36"PL-DIP

8"PD-DIP

1 1/2"UW-PVC

20"SL-DIP

36" ML-DIP

SEE PARTIAL PLAN SHT. CU1.16 FOR PIPING DETAILS

6"SC-DIP

3/4"UW-PVC

4" PD-DIP

6"PD-DIP

MH PD-A5.1

8"PV

4"SC-DIP(RJ)

42"RAS-DIP(RJ)

4"UW-DIP(RJ)

MH PL-C2

2"UW-PVC

2"CC-PVC

8"PD-DIP@0.40%

2"GV

6"WAS-DIP(RJ)

6"WELDED-ON BOSS

4"X3" SERVICE SADDLE

4"RJ PLUG
N 1540187.79±
E 1985738.97±

4"PV

3"UW-PVC

CONNECT TO EXIST. 3" UW

CONNECT TO EXIST.6"WAS W/6"X4"RED & MJ SOLID SLEEVE & MEGALUGS

CONNECT TO EXIST.6"WAS W/6"TEE & MJ SOLID

MH-SN5
6"I.E.581.41(NW&SE)
N 1540305.90
E 1985736.39

MH-SN4

MH-SN3

MH-SN2

42"-45° BEND ROTATED
℄ EL. 564.00
N 1540168.41
E 1985794.31

42"-45° BEND ROTATED
℄ EL. 575.50
N 1540202.70
E 1985777.20

42"-45° BEND
℄ EL. 575.50
N 1540265.32
E 1985795.05

48"-45° BEND
℄ EL. 569.50

48"-45° BEND
℄ EL. 569.50

6"SN-DIP @ 1.00%

6"SC-DIP @ 1.00%

4"QUICK-DISC. COUPLING

2"PD/FM-PVC

3/4"UW-PVC

6"X1" SERVICE SADDLE W/1"GV

1"UW-CU

6"UW-DIP(RJ) (4'-0"MIN. COVER)

2 X 2 GRATE T/G=584.76 I.E.=582.56'

2 X 2 GRATE T/G=584.33 I.E.=582.52'

2 X 2 GRATE T/G=583.55 I.E.=580.20'

2 X 2 GRATE T/G=582.06 I.E.in/out =579.66'

2 X 2 GRATE T/G=581.77 I.E.=573.77'

2 X 2 GRATE T/G=577.89 I.E.=573.44'

2 X 2 GRATE T/G=576.68 I.E.=573.68'

2 X 2 YARD GRATE TOP = 577.03' I.E.15 out=569.66'

2 X 2 YARD GRATE TOP = 575.58' I.E.24"in/out=569.46'

2 X 2 YARD GRATE TOP = 575.37' I.E.36"in/out=566.57'

2 X 2 YARD GRATE TOP = 575.14' I.E.36"in/out=566.44'

M.H. RIM=586.46' I.E.8"out nw=582.56' I.E.6"in se=582.41'

M.H. RIM=585.75' I.E.24"R.C.P.in & out

M.H. RIM=585.78' I.E. 10" VCP in s = 564.48' I.E. 10"VCP out nw = 564.43' I.E. 6" VCP in e = 580.38' I.E. 6" VCP in w = 567.60'

M.H. RIM=589.47' I.E.6"DIP out n =582.87' I.E.6"DIP in n =586.97' I.E.6"DIP in e =583.87'

M.H. RIM=580.96' I.E.10" VCP in s = 565.71' I.E. 10" VCP out n = 565.66' I.E.24" R.C.P. in = 565.46' I.E.18" R.C.P. in = 573.25'

M.H. RIM=580.45' I.E.24" out s=573.16' I.E.24" in n =573.46' I.E.18" R.C.P. in = 573.25'

M.H. RIM=585.21' I.E.15" R.C.P.out = 578.11' I.E.15" R.C.P.in ne= 579.59' I.E.15" R.C.P. in n = 580.56'

M.H. RIM = 585.44' I.E.24" ne = 580.04'

M.H. RIM=580.60' I.E.24" out = 578.50'

M.H. RIM=577.95' I.E.15" R.C.P.out = 571.95' I.E.15" R.C.P. in from MH = 571.95' I.E.15" R.C.P.in e = 572.20' I.E.15" R.C.P. in from GRATE = 573.40'

L.B. RIM = 577.11' I.E.36"in/out=567.11' I.E.24"in=567.24'

C.B. RIM=586.15' I.E.all=575.65'

C.B. RIM=585.63' I.E.out=575.23'

C.B. RIM=584.33' I.E.out=575.52'

C.B. RIM=583.55' I.E.out=575.55'

C.B. RIM=584.76' I.E.out=575.55'

C.B. RIM=585.22' I.E.out=575.72'

C.B. RIM=585.22' I.E.out=575.72'

C.B. RIM=585.22' I.E.out=575.72

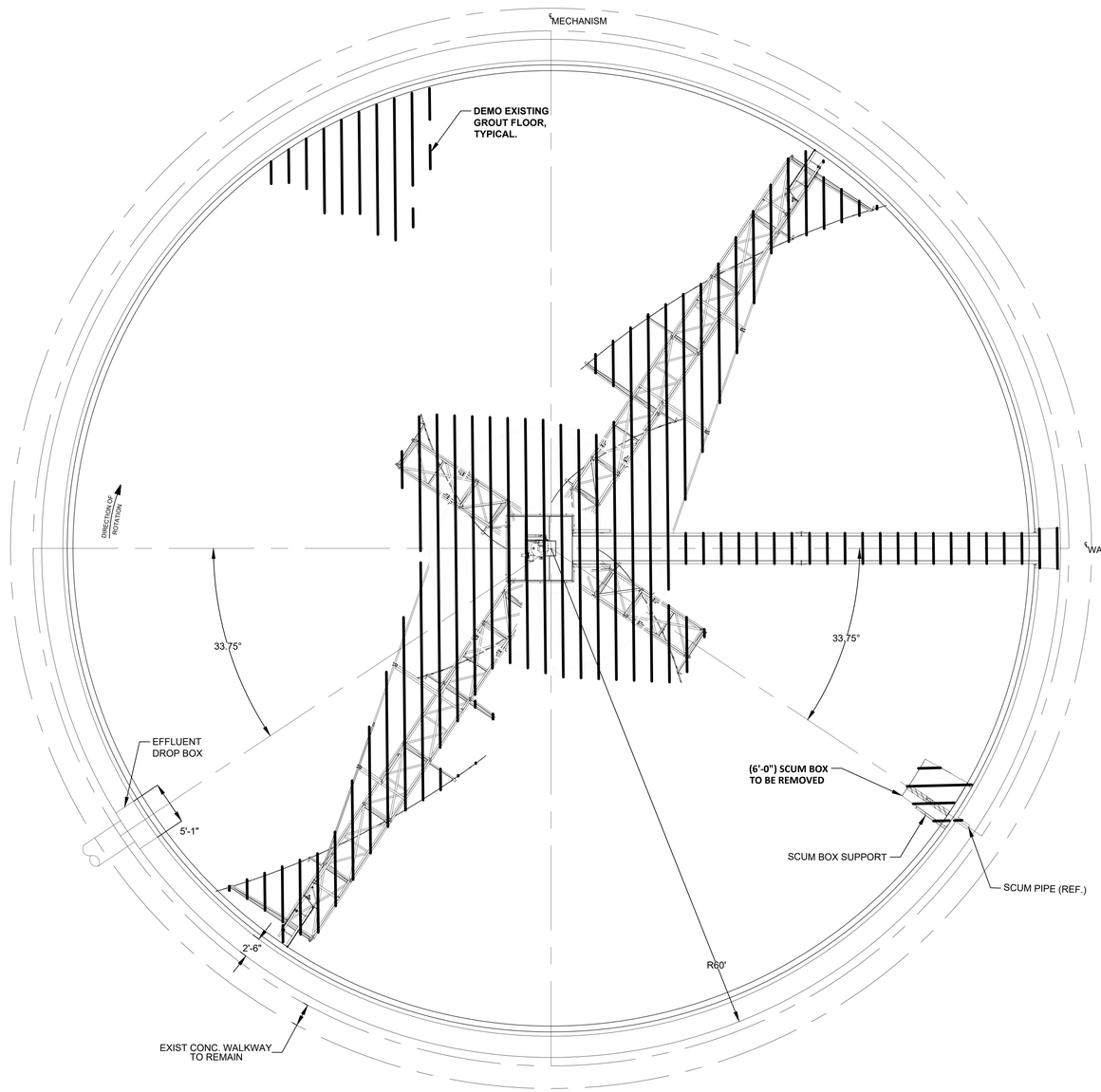

DEMOLITION PLAN - CLARIFIER NO. 2

SCALE: 1/8" = 1'-0"

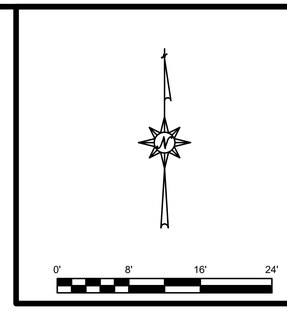

DENOTES DEMOLITION:

1. DEMOLITION WORK REQUIRED (COMPONENTS TO BE REMOVED, RELOCATED AND/OR DISPOSED OF BY THE CONTRACTOR UNLESS INDICATED OTHERWISE.)

2. OWNER SHALL RETAIN OWNERSHIP OF THE FOLLOWING ITEMS:
   A. EXISTING DRIVES
   B. EXISTING ELECTRICAL CONTROLS AND EQUIPMENT

THE ITEMS LISTED ABOVE SHALL BE THOROUGHLY CLEANED & DISINFECTED AND RETURNED TO THE OWNER'S MAINTENANCE SHOP (OR OTHER LOCATION DETERMINED BY THE OWNER) BY THE CONTRACTOR. THE OWNER WILL HAVE THE RIGHT TO REJECT ANY ITEM. ALL ITEMS SHALL BE SALVAGED IN OPERATIONAL CONDITION AFTER REMOVAL.

3. THIS DRAWING IS A VERSION FROM A COMBINATION OF PREVIOUS PROJECTS. IT IS NOT AN AS-BUILT DRAWING. THIS DRAWING IS FOR DEMOLITION AND SALVAGE PURPOSES ONLY.

DEMOLITION NOTES:

1. THIS IS AN ACTIVE SEWAGE TREATMENT PLANT IN SERVICE 24 HRS/7 DAYS A WEEK, THE DEMOLITION SHALL TAKE PLACE AT AN APPROPRIATE TIME AND AFTER SIGNIFICANT PROPOSED FACILITIES ARE IN PLACE, TESTED, APPROVED FOR SERVICE BY THE ENGINEER & OWNER, AND ARE FULLY OPERATIONAL. THERE ARE UNDERGROUND PIPES AND ELECTRICAL LINES THROUGHOUT. EXTREME CARE SHALL BE TAKEN. THE CONTRACTOR SHALL EXCAVATE AND RELOCATE AS MANY OBSTACLES AS NECESSARY. THE CONTRACTOR SHALL COORDINATE ALL RELOCATED PIPES, ELECTRICAL, ETC., WITH THE OWNER AND ENGINEER.

2. OFF PEAK TIE-INS, DEMO, ETC., MAY BE REQUIRED AT THE OWNER/ENGINEERS DISCRETION. THIS MAY REQUIRE WEEKEND AND OR NIGHT TIME (OR VERY EARLY IN THE MORNING) WORK (NO ADDITIONAL PAYMENTS WILL BE MADE).

3. REMOVE ELECTRICAL WIRING, PIPING, STRUCTURES, CONCRETE, ANCHOR BOLTS (GRIND SMOOTH & FLUSH), ETC. FROM DEMOLITION AREAS UNLESS NOTED OTHERWISE. WASTE MATERIAL TO BE HAULED OFF SITE AND DISPOSED OF BY THE CONTRACTOR. ALL DAMAGED OR SPALLING CONCRETE SHALL BE REPAIRED & PATCHED SUCH THAT ALL REMAING CONCRETE IN DEMOLITION AREAS IS SOUND AND SMOOTH.

4. ADDITIONAL DEMOLITION MAY BE REQUIRED, SEE INDIVIDUAL PLANS FOR ADDITIONAL DEMO WHICH MAY BE REQUIRED.

5. DEMOLITION MUST BE CAREFULLY SCHEDULED TO AVOID INTERRUPTIONS TO PROCESS. MUCH OF THE DEMOLITION CANNOT BE INITIATED UNTIL NEW SCREEN AND ASSCIATED EQUIPMENT SATISFACTORILY PASS TESTING AND ARE OPERATIONAL.

INSITE ENGINEERING
HOOVER | TUSCALOOSA
5800 FELDSPAR WAY
HOOVER, ALABAMA 35244
OFFICE (205) 733-9696
FAX (205) 733-9697
CIVIL / GIS
INFRASTRUCTURE
ENVIRONMENTAL
PLANNING
COMMERCIAL
RESIDENTIAL

CONSTRUCTION PLANS FOR:
BLACKS BLUFF WRF SECONDARY CLARIFIER NO. 2 REHAB
ROME, GEORGIA

REVIEW DRAWING
(NOT FOR CONSTRUCTION)

PROJECT INFO:
INSITE - HOOVER
INSITE JOB No. 25124.00
PLOTTED: 03/06/26
ISSUED FOR REVIEW

PRELIMINARY
(NOT FOR CONSTRUCTION)

THIS SHEET CONTAINS:
DEMOLITION PLAN

SHEET 6 OF 11

DM-1

C:\InSite\InSite Engineering LLC\Rome 25124.00 - Blacks Bluff WWTP 2025 Upgrades - Documents\03 - Design Phase\03.50 - Cad Design\01 - Cad\0_Clarifier Demo & Proposal.dwg
THIS DRAWING AND THE DESIGN SHOWN IS THE PROPERTY OF INSITE ENGINEERING, LLC
THE REPRODUCTION, COPYING OR ASSIGNMENT TO ANY PARTY WITHOUT THE EXPRESS WRITTEN CONSENT IS PROHIBITED AND ANY INFRINGEMENT WILL BE SUBJECT TO LEGAL ACTION.
COPYRIGHT © 2026, INSITE ENGINEERING, LLC

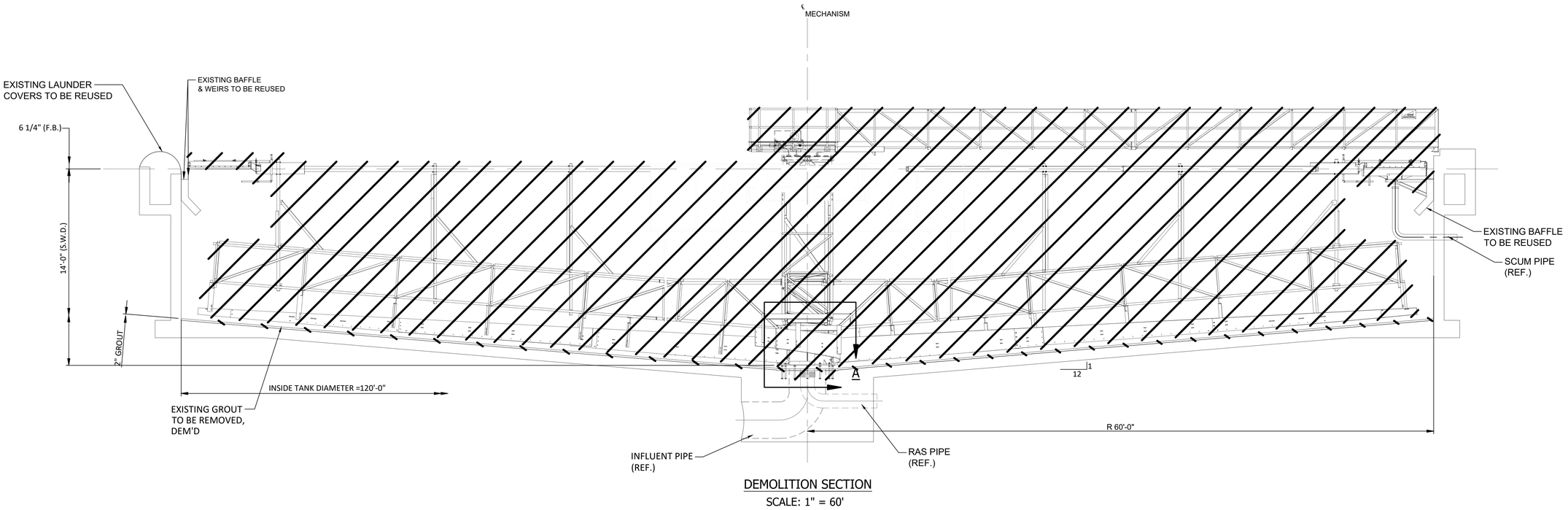

DEMOLITION SECTION

SCALE: 1" = 60'

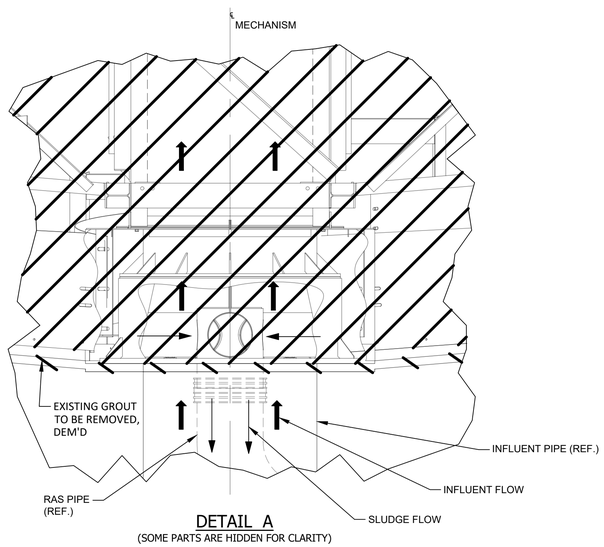

DETAIL A

(SOME PARTS ARE HIDDEN FOR CLARITY)

INSITE ENGINEERING

HOOVER | TUSCALOOSA

5800 FELDSPAR WAY
HOOVER, ALABAMA 35244
OFFICE (205) 733-9696
FAX (205) 733-9697

CIVIL / GIS
INFRASTRUCTURE
ENVIRONMENTAL
PLANNING
COMMERCIAL
RESIDENTIAL

CONSTRUCTION PLANS FOR:

BLACKS BLUFF WRF SECONDARY CLARIFIER NO. 2 REHAB

ROME, GEORGIA

REVIEW DRAWING
(NOT FOR CONSTRUCTION)

PROJECT INFO:

INSITE - HOOVER

INSITE JOB No. 25124.00

PLOTTED: 03/06/26

ISSUED FOR REVIEW

PRELIMINARY
(NOT FOR CONSTRUCTION)

THIS SHEET CONTAINS:

DEMOLITION SECTIONS

SHEET 7 OF 11

DM-2

C:\InSite\InSite Engineering LLC\Rome 25124.00 - Blacks Bluff WWTP 2025 Upgrades - Documents\03 - Design Phase\03.50 - Cad Design\01 - Cad\0_Clarifier Demo & Proposal.dwg

THIS DRAWING AND THE DESIGN SHOWN IS THE PROPERTY OF INSITE ENGINEERING, LLC
THE REPRODUCTION, COPYING OR ASSIGNMENT OF THIS DRAWING OR DESIGN WITHOUT THE
EXPRESS WRITTEN CONSENT OF INSITE ENGINEERING, LLC IS PROHIBITED. ANY UNAUTHORIZED
CONSENT IS PROHIBITED AND ANY INFRINGEMENT WILL BE SUBJECT TO LEGAL ACTION.
COPYRIGHT © 2026, INSITE ENGINEERING, LLC

C:\InSite\InSite Engineering LLC\Rome 25124.00 - Blacks Bluff WWTP 2025 Upgrades - Documents\03 - Design Phase\03.50 - Cad Design\01 - Cad\0_Clarifier Demo & Proposal.dwg

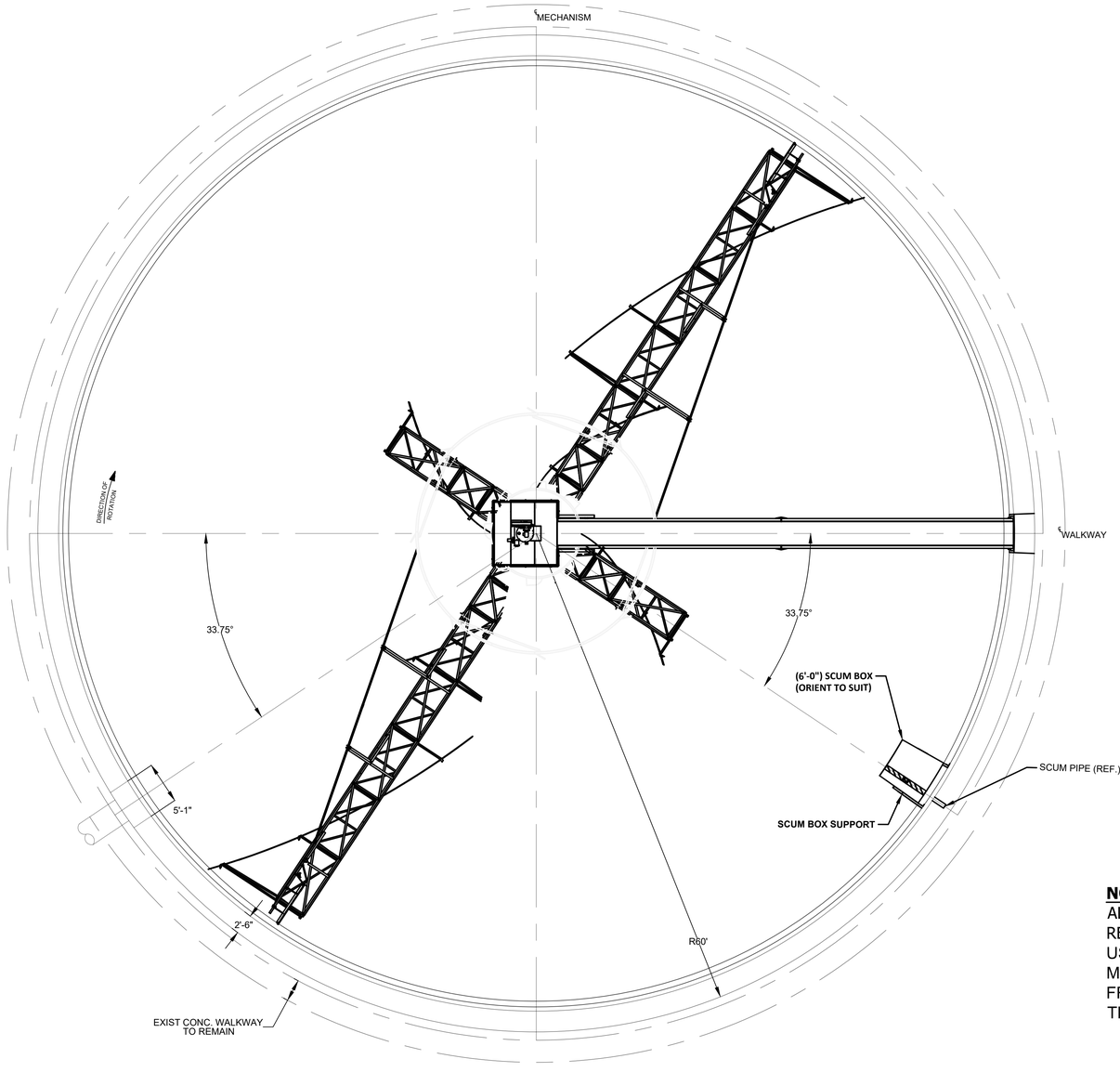

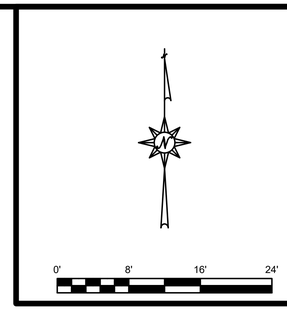

NOTE:
ALL CLARIFIER EQUIPMENTS TO BE REMOVED & REPLACED. OVIVO 120 FOOT C4D-CMD CLARIFIER USED AS THE BASIS OF DESIGN. ANY MODIFICATIONS TO THE DESIGN REQUIRED FROM A DIFFERENT MANUFACTURER TO BE AT THE EXPENSE OF THE CONTRACTOR

PROPOSAL PLAN - CLARIFIER NO. 2

SCALE: 1/8" = 1'-0"

INSITE ENGINEERING
HOOVER | TUSCALOOSA
5800 FELDSPAR WAY
HOOVER, ALABAMA 35244
OFFICE (205) 733-9696
FAX (205) 733-9697
CIVIL / GIS
INFRASTRUCTURE
ENVIRONMENTAL
PLANNING
COMMERCIAL
RESIDENTIAL

CONSTRUCTION PLANS FOR:
BLACKS BLUFF WRF SECONDARY CLARIFIER NO. 2 REHAB
ROME, GEORGIA

REVIEW DRAWING
(NOT FOR CONSTRUCTION)

PROJECT INFO:
INSITE - HOOVER
INSITE JOB No. 25124.00
PLOTTED: 03/06/26
ISSUED FOR REVIEW

PRELIMINARY
(NOT FOR CONSTRUCTION)

THIS SHEET CONTAINS:
PROPOSAL PLAN

SHEET 8 OF 11

CL-1

THIS DRAWING AND THE DESIGN SHOWN IS THE PROPERTY OF INSITE ENGINEERING, LLC THE REPRODUCTION, COPYING OR ASSIGNMENT TO ANY PARTY WITHOUT THE WRITTEN CONSENT IS PROHIBITED AND ANY INFRINGEMENT WILL BE SUBJECT TO LEGAL ACTION.
COPYRIGHT, © 2026, INSITE ENGINEERING, LLC

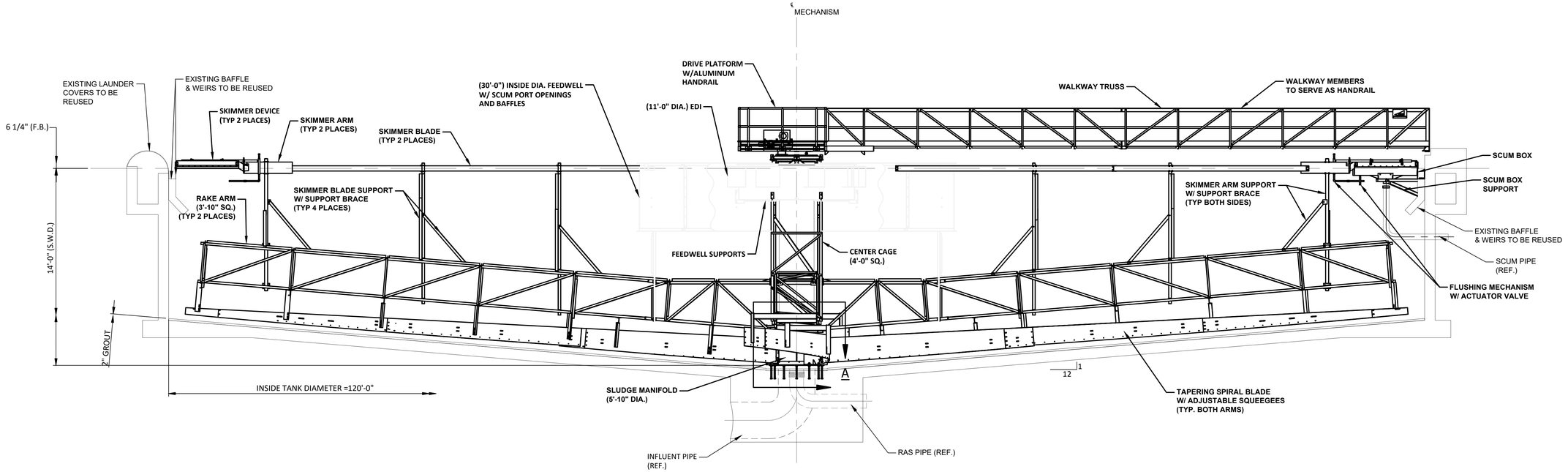

PROPOSAL SECTION

SCALE: 1" = 60'

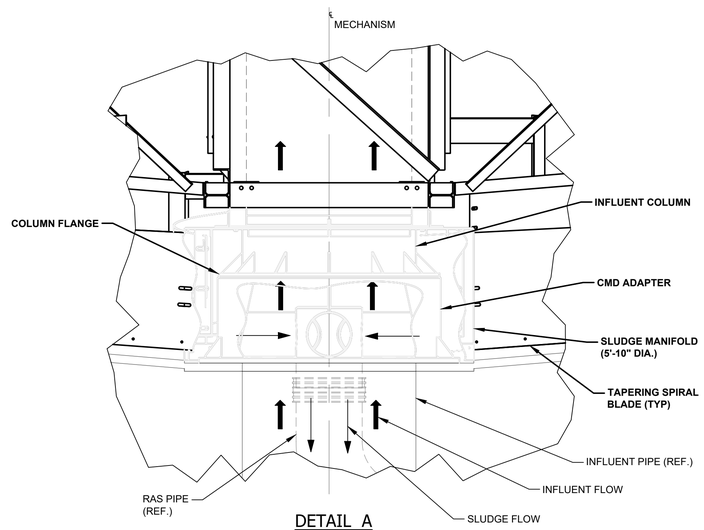

DETAIL A

(SOME PARTS ARE HIDDEN FOR CLARITY)

INSITE ENGINEERING
HOOVER | TUSCALOOSA
5800 FELDSPAR WAY
HOOVER, ALABAMA 35244
OFFICE (205) 733-9696
FAX (205) 733-9697
CIVIL / GIS
INFRASTRUCTURE
ENVIRONMENTAL
PLANNING
COMMERCIAL
RESIDENTIAL

CONSTRUCTION PLANS FOR:

BLACKS BLUFF WRF SECONDARY CLARIFIER NO. 2 REHAB

ROME, GEORGIA

REVIEW DRAWING
(NOT FOR CONSTRUCTION)

PROJECT INFO:
INSITE - HOOVER
INSITE JOB No. 25124.00
PLOTTED: 03/06/26
ISSUED FOR REVIEW

PRELIMINARY
(NOT FOR CONSTRUCTION)

THIS SHEET CONTAINS:
PROPOSAL SECTIONS

SHEET 9 OF 11

CL-2

C:\InSite\InSite Engineering LLC\Rome 25124.00 - Blacks Bluff WWTP 2025 Upgrades - Documents\03 - Design Phase\03.50 - Cad Design\01 - Cad\0_Clarifier Demo & Proposal.dwg

THIS DRAWING AND THE DESIGN SHOWN IS THE PROPERTY OF INSITE ENGINEERING, LLC
THE REPRODUCTION, COPYING OR ASSIGNMENT OF THIS DESIGN OR PLAN WITHOUT THE
EXPRESS WRITTEN CONSENT OF INSITE ENGINEERING, LLC IS PROHIBITED. ANY
CONSENT IS PROHIBITED AND ANY INFRINGEMENT WILL BE SUBJECT TO LEGAL ACTION.
COPYRIGHT © 2026, INSITE ENGINEERING, LLC

C:\InSite\InSite Engineering LLC\Rome 25124.00 - Blacks Bluff WWTP 2025 Upgrades - Documents\03 - Design Phase\03.50 - Cad Design\01 - Cad\0_Details.dwg

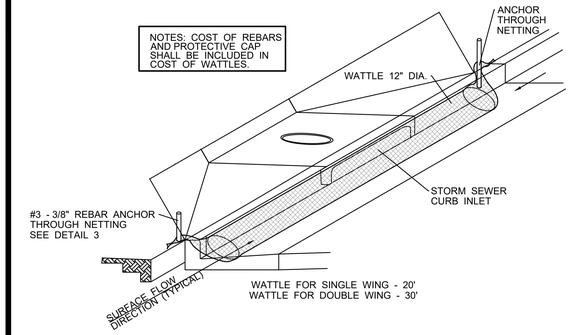

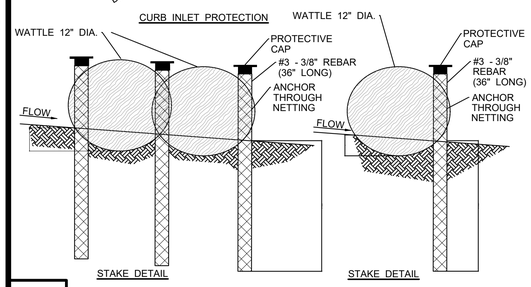

1 DETAIL - CURB INLET PROTECTION
SCALE: NONE

NOTES:
1. FRAMES WITH EITHER SQUARE OR CIRCULAR BASES MAY BE USED. SELECTED FRAME BASE SHOULD PROVIDE BEST SEAL AROUND INLET AS DIRECTED BY THE ENGINEER.
2. FILL POCKETS AROUND BASE OF FILTER COVER WITH #57 STONE OF SOIL. STONE IS REQUIRED WHEN ANCHORING THE MANUFACTURED INLET PROTECTION DEVICE OVER PAVED DITCH OR FLUME.
3. USE ONLY DURING STAGE 3 OR STAGE 4 INLET CONSTRUCTION.
4. FOR MEDIAN INLET PROTECTION, THE ELEVATION OF THE COARSE SCREEN TOP SHOULD BE A MINIMUM OF 6" BELOW THE ELEVATION OF THE OUTSIDE EDGE OF THE INSIDE SHOULDER.

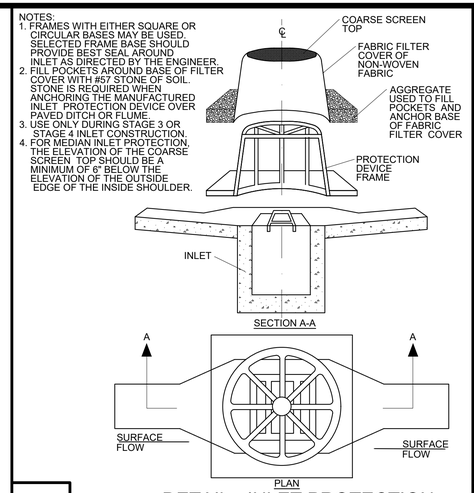

2 DETAIL - INLET PROTECTION
SCALE: NONE

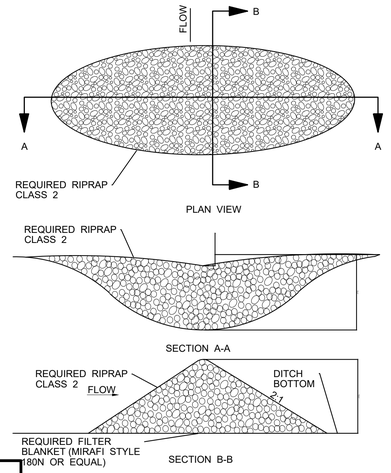

3 DETAIL - RIPRAP DITCH CHECK
SCALE: NONE

NOTES:
1. MINIMUM RECOMMENDED PLACEMENT INTERVAL BETWEEN WATTLE DITCH CHECK IS 100 FEET UNLESS SHOWN OTHERWISE ON THE PLANS OR APPROVED BY THE ENGINEER.
2. ANCHORING STAKES SHALL BE SIZED, SPACED, DRIVEN, AND BE OF A MATERIAL THAT EFFECTIVELY SECURES THE CHECK. STAKE SPACING SHALL BE A MAXIMUM OF TWO FEET.
3. WATTLES SHOULD NOT BE USED IN HARD BOTTOM CHANNELS.
4. STAPLES SPACED 18 INCHES APART ALONG THE CHANNEL EDGES AND DOWN THE CENTER OF THE CHANNEL. STAPLES SPACED 10 INCHES APART ACROSS THE UPSTREAM AND DOWNSTREAM EDGES.

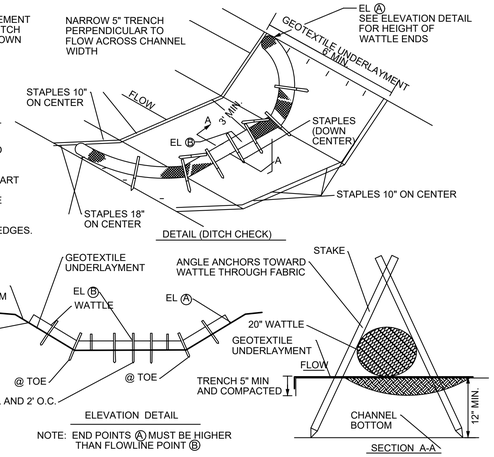

4 DETAIL - WATTLE DITCH CHECK
SCALE: NONE

GENERAL NOTES:
1. SILT FENCE SHALL BE INSTALLED WHERE SHOWN ON EROSION CONTROL PLAN.
2. FILTER FABRIC SHALL BE A MINIMUM OF 36" IN WIDTH AND SHALL BE FASTENED SECURELY TO THE POSTS.
3. STEEL "T" POSTS SHALL BE 5'-0" IN HEIGHT AND BE OF SELF FASTENER ANGLE STEEL TYPE.
4. FILTER FABRIC SHALL BE FASTENED TO WOODEN POST WITH NOT LESS THAN #9 WIRE STAPLES @ 1" LONG.
5. CONTRACTOR SHALL PERIODICALLY REMOVE ACCUMULATED SEDIMENT, WHEN SEDIMENT DEPTH REACHES 12".
6. THE FILTER FABRIC SHALL MEET THE FOLLOWING REQUIREMENTS:
   A) EOS IS NOT LARGER THAN U.S. STANDARD SIEVE NO.70
   B) GRAB STRENGTH 90-120 LB
   C) CONFORM TO ASTM D-1682 OR ASTM D-177

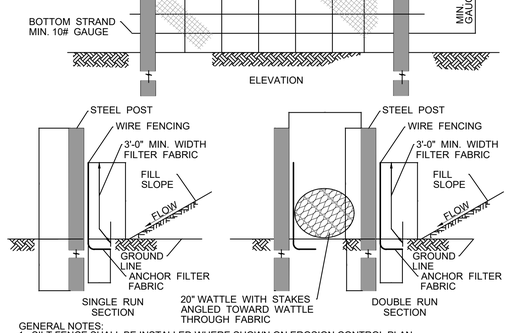

5 DETAIL - SILT FENCE (ADVANCED MEASURES)
SCALE: NONE

GENERAL NOTES
1. TOTAL VOLUME OF SUMP EXCAVATIONS SHOULD BE APPROX. 67 CU. YDS. PER ACRE OF DISTURBED SOIL RUNOFF.
2. WHERE 67 CU. YDS. OR MORE IS REQUIRED AND SPACE IS LIMITED, MORE THAN ONE SUMP MAY BE REQUIRED.
3. WHERE SEDIMENT RETENTION IS NEEDED, BUT ROCK OUTCROPPING PREVENTS NORMAL EXCAVATION, AN ADEQUATE TEMPORARY DITCH CHECK ONLY SHALL BE INSTALLED.
4. ACCUMULATED SEDIMENT SHALL BE REMOVED AS NEEDED TO MAINTAIN SIZE OF DRAINAGE SUMP SHOWN. COST OF SEDIMENT REMOVAL SHALL BE A SUBSIDIARY OBLIGATION OF DRAINAGE SUMP EXCAVATION.

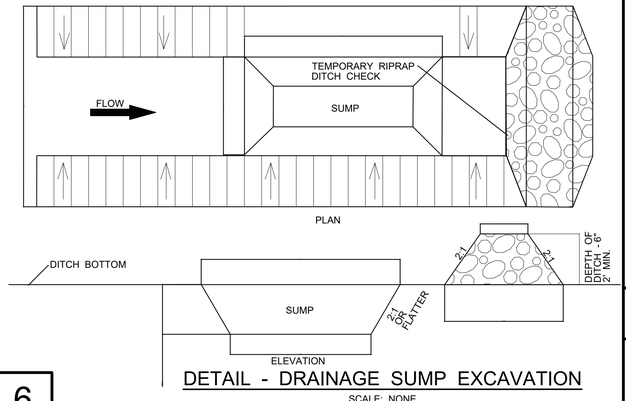

6 DETAIL - DRAINAGE SUMP EXCAVATION
SCALE: NONE

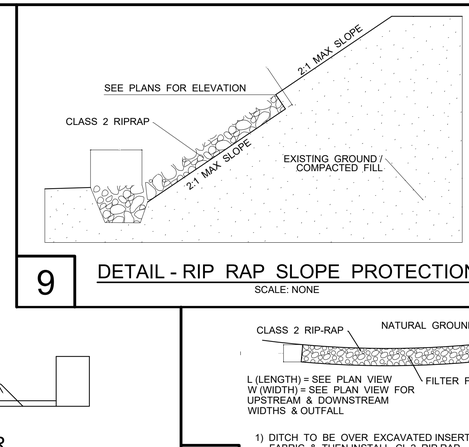

7 DETAIL - POND OUTLET SKIMMER
SCALE: NONE

9 DETAIL - RIP RAP SLOPE PROTECTION
SCALE: NONE

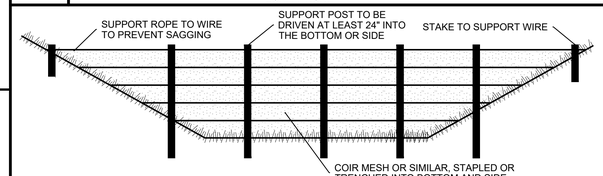

8 DETAIL - CROSS-SECTION OF A JUTE FENCE BAFFLE IN A SEDIMENT BASIN
SCALE: NONE

10 DETAIL - OUTLET PROTECTION
SCALE: NONE

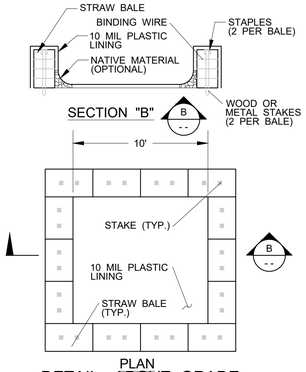

11 DETAIL - ABOVE GRADE CONCRETE WASHOUT WITH STRAW BALES
SCALE: NONE

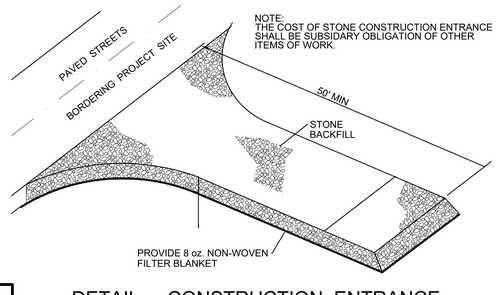

12 DETAIL - CONSTRUCTION ENTRANCE
SCALE: NONE

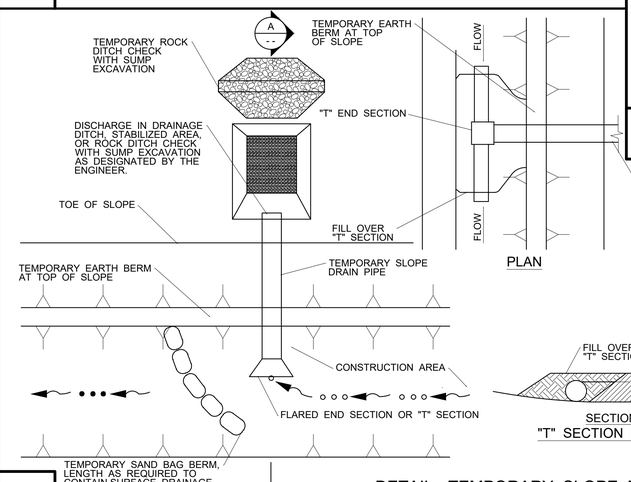

13 DETAIL - TEMPORARY SLOPE DRAIN PIPES
SCALE: NONE

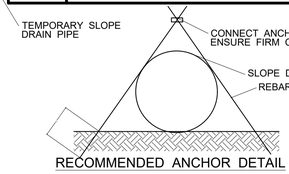

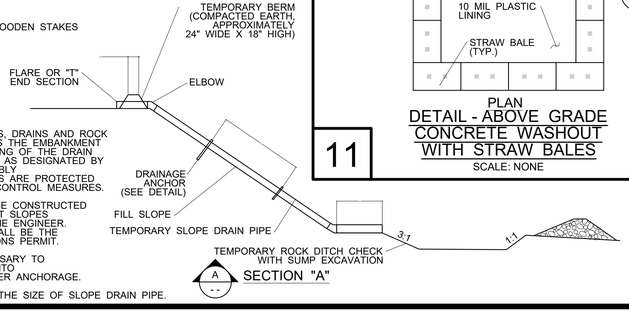

NOTES:
1. TEMPORARY SLOPE DRAINS (BERMS, DRAINS AND ROCK IF NECESSARY) SHALL BE USED AS THE EMBANKMENT IS CONSTRUCTED. MAXIMUM SPACING OF THE DRAIN ASSEMBLY SHALL BE 300 FEET, OR AS DESIGNATED BY THE ENGINEER. THE DRAIN ASSEMBLY SHALL BE USED UNITL THE SLOPES ARE PROTECTED WITH PERMANENT SOIL EROSION CONTROL MEASURES.
2. TEMPORARY BERMS SHALL ALSO BE CONSTRUCTED AT THE TOP OF ALL ERODIBLE CUT SLOPES DESIGNATED OR PERMITTED BY THE ENGINEER. THE GRADIENT OF THE BERMS SHALL BE THE MINIMUM POSSIBLE THAT CONDITIONS PERMIT.
3. IN SOME CASES IT MAY BE NECESSARY TO EMBED METAL OR PLASTIC PIPE INTO THE FILL SLOPE TO ENSURE PROPER ANCHORAGE.
4. THE CONTRACTOR SHALL SELECT THE SIZE OF SLOPE DRAIN PIPE.

THIS DRAWING AND THE DESIGN SHOWN IS THE PROPERTY OF INSITE ENGINEERING, LLC THEY ARE NOT TO BE USED IN WHOLE OR PART FOR ANY OTHER PROJECT WITHOUT THE WRITTEN CONSENT IS PROHIBITED AND ANY INFRINGEMENT WILL BE SUBJECT TO LEGAL ACTION.
COPYRIGHT, © 2026, INSITE ENGINEERING, LLC

INSITE ENGINEERING
HOOVER | TUSCALOOSA
5800 FELDSPAR WAY
HOOVER, ALABAMA 35244
OFFICE (205) 733-9696
FAX (205) 733-9697
CIVIL / GIS
INFRASTRUCTURE
ENVIRONMENTAL
PLANNING
COMMERCIAL
RESIDENTIAL

CONSTRUCTION PLANS FOR:
BLACKS BLUFF WRF SECONDARY CLARIFIER NO. 2 REHAB
ROME, GEORGIA

REVIEW DRAWING
(NOT FOR CONSTRUCTION)

PROJECT INFO:
INSITE - HOOVER
INSITE JOB No. 25124.00
PLOTTED: 03/06/26
ISSUED FOR REVIEW

PRELIMINARY
(NOT FOR CONSTRUCTION)

THIS SHEET CONTAINS:
EROSION CONTROL DETAILS

SHEET 10 OF 11

DT-1

C:\InSite\InSite Engineering LLC\Rome 25124.00 - Blacks Bluff WWTP 2025 Upgrades - Documents\03 - Design Phase\03.50 - Cad Design\01 - Cad\0_Details.dwg

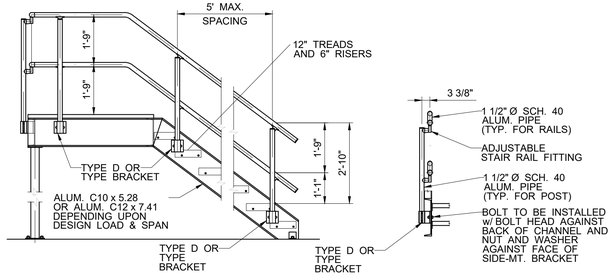

1

DETAIL - ALUMINUM STAIRS
SCALE: NONE

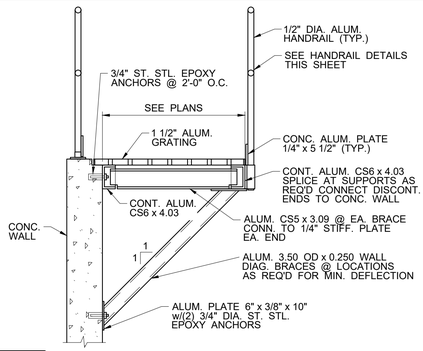

2

DETAIL - ALUMINUM WALKWAY
SCALE: NONE

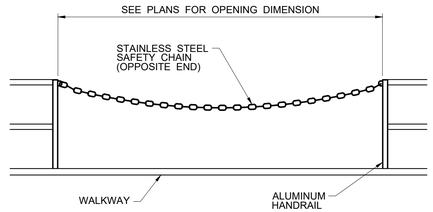

3

DETAIL - STAINLESS STEEL SAFETY CHAIN
SCALE: NONE

NOTES:
1. GRATING TO BE FURNISHED IN PIECES SIZED FOR EASY HANDLING. ALL CUT OPENINGS TO BE BANDED.
2. ALL GRATING & FRAMES TO BE ALUM. ALLOY 6063-T6.
3. ALL GRATING ABOVE LADDERS OR STEPS SHALL BE FURNISHED WITH A REMOVABLE SECTION FOR ACCESS.

GRATING SCHEDULE		
CLEAR SPAN	DEPTH OF GRATING	MIN. WEIGHT OF GRATING L.B/S.F.
0'-0" TO 5'-0"	1½"	2.69
5'-0" TO 6'-0"	2"	3.42

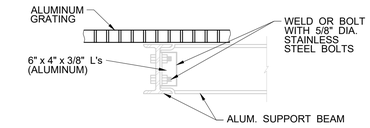

SUPPORT BEAM TYPICAL INTERSECTION

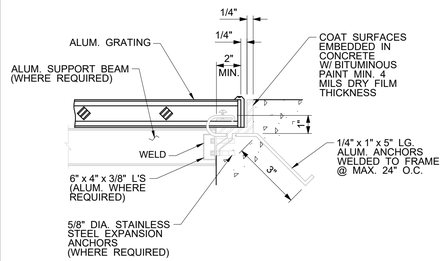

EMBEDDED INSTALLATION

5

DETAIL - ALUMINUM GRATING
SCALE: NONE

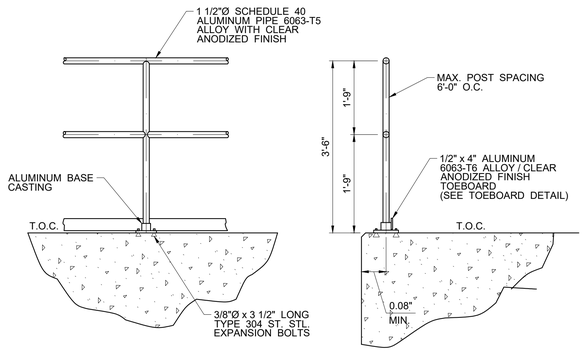

TOP MOUNTED ALUMINUM HANDRAIL

NOTE:
MAKE PROVISIONS FOR EXPANSION AND CONTRACTION OF RAIL AND TOE PLATE AT REGULAR INTERVALS AND AT CORRESPONDING JOINT IN STRUCTURE TO WHICH HANDRAIL IS ATTACHED.

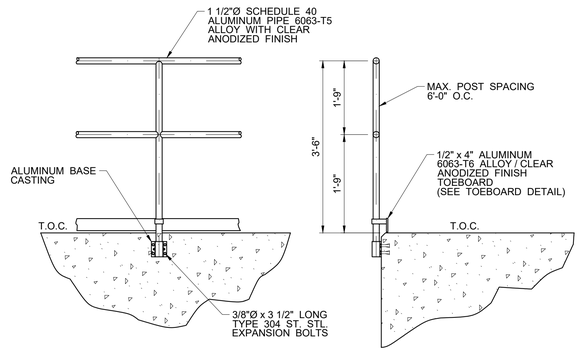

SIDE MOUNTED ALUMINUM HANDRAIL

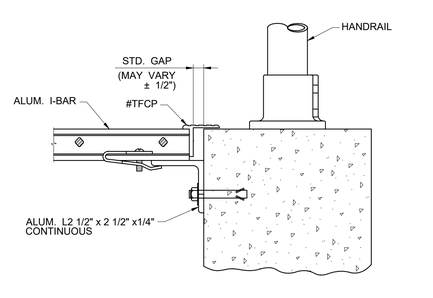

4

DETAIL - GRATING WITH TOP MOUNTED HANDRAIL
SCALE: NONE

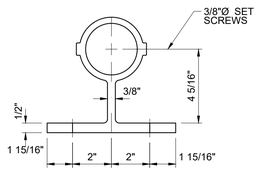

PLAN

NOTE:
LOCATE SET SCREWS IN BASE FLANGE AT 90° FROM CENTERLINE OF H.R. RUN AND ON SIDE AWAY FROM WALKING SURFACE.

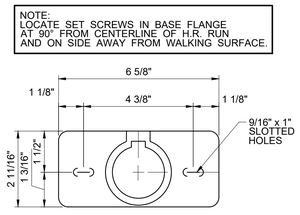

PLAN

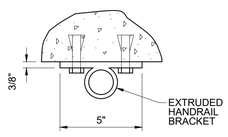

PLAN

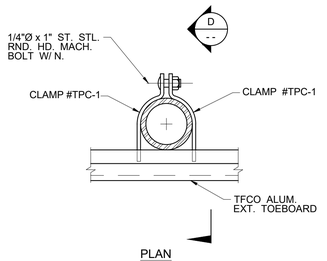

PLAN

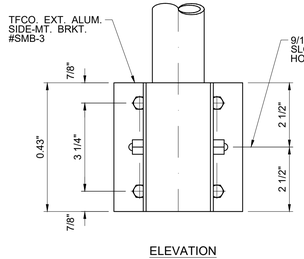

ELEVATION

SIDE MOUNTED ON BEAM

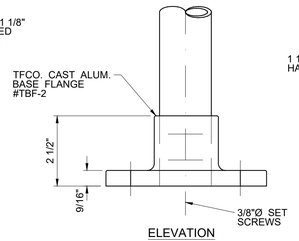

ELEVATION

TOP MOUNTED ON CONCRETE

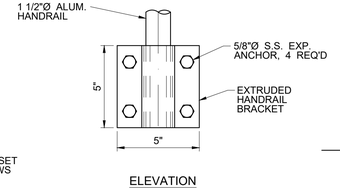

ELEVATION

SIDE MOUNTED ON CONCRETE

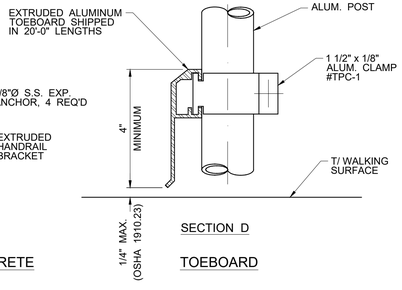

SECTION D

TOEBOARD

DETAIL - ALUMINUM HANDRAIL
SCALE: NONE

6

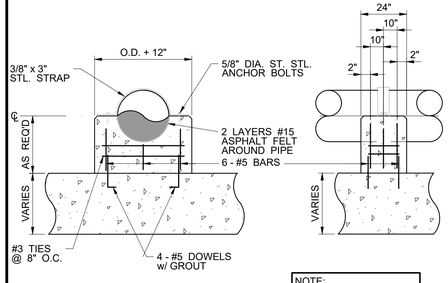

NOTE:
NO STRAPS REQUIRED AT TEES.

DETAIL - CONCRETE PIPE SUPPORT
SCALE: NONE

7

INSITE ENGINEERING
HOOVER | TUSCALOOSA
5800 FELDSPAR WAY
HOOVER, ALABAMA 35244
OFFICE (205) 733-9696
FAX (205) 733-9697
CIVIL / GIS
INFRASTRUCTURE
ENVIRONMENTAL
PLANNING
COMMERCIAL
RESIDENTIAL

CONSTRUCTION PLANS FOR:
BLACKS BLUFF WRF SECONDARY CLARIFIER NO. 2 REHAB
ROME, GEORGIA

REVIEW DRAWING
(NOT FOR CONSTRUCTION)

PROJECT INFO:
INSITE - HOOVER
INSITE JOB No. 25124.00
PLOTTED: 03/06/26
ISSUED FOR REVIEW

PRELIMINARY
(NOT FOR CONSTRUCTION)

THIS SHEET CONTAINS:
MISCELLANEOUS METALS DETAILS

SHEET 11 OF 11

DT-2

THIS DRAWING AND THE DESIGN SHOWN IS THE PROPERTY OF INSITE ENGINEERING, LLC THE REPRODUCTION OF THESE PLANS WITHOUT THE WRITTEN PERMISSION AND CONSENT IS PROHIBITED AND ANY INFRINGEMENT WILL BE SUBJECT TO LEGAL ACTION.
COPYRIGHT, © 2026, INSITE ENGINEERING, LLC